GIANT ELECTRIC



Product Summary

Zhejiang Zhegui Electric Co.,Ltd

Wechat/WhatsApp: +86 13353325100

Qiligang Industrial Zone, Liushi Town,
Yueqing City, Wenzhou City, Zhejiang Province

Mobile: +86 13353325100

Email: emmali@giantele.com

ZHEGUI reserve the right to make technical changes or modify the contens of this documentwithout prior notice.Al the agreed particulars shall prevail. All Right Reserved

© Zhejiang ZHEGUI Electric Co., Ltd. All Right Reserved

Good faith and win-win

QUALITY INNOVATION

Zhegui Electric Co., Ltd

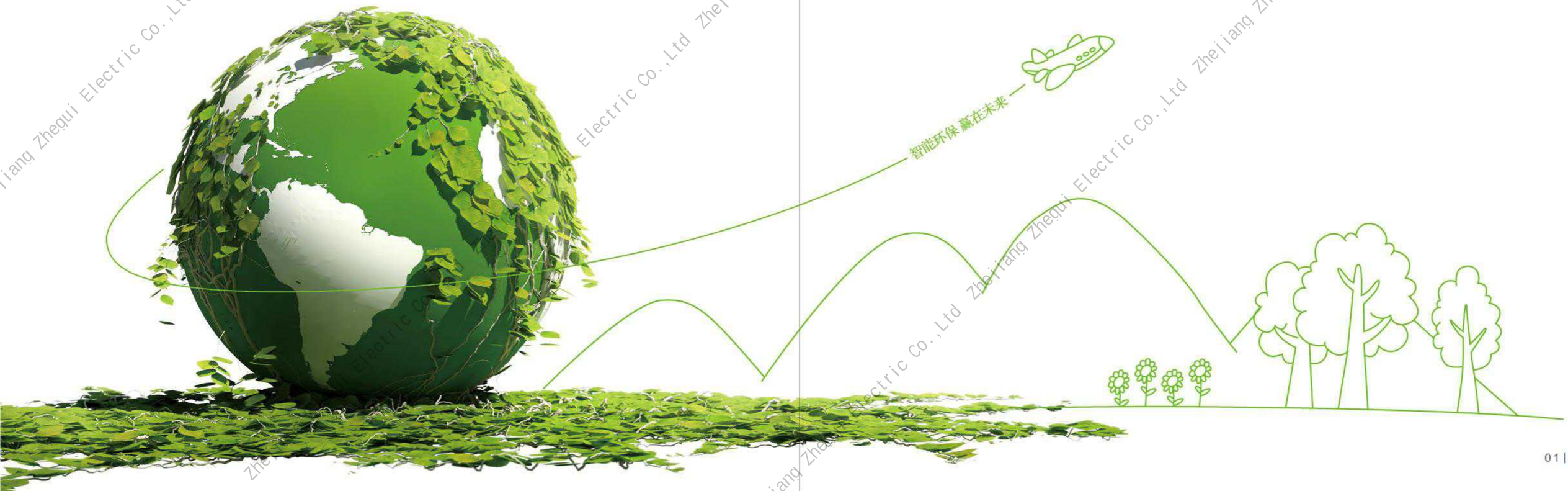

Zhejiang Zhegui Electric Co.,Ltd









GIANT ELECTRIC

Company Profiles

Zhejiang Zhegui Electric Co., Ltd was established in 2013. Our company has nearly 60 million fixed assets, covering 20000 square meters. Our products with its excellent brand reputation and quality throughout the country large and medium-sized city, and are exported to more than 50+ countries and regions.

We specialize in R&D production of low&medium voltage power distribution equipment and electrical accessories, etc. We provide all kinds of technical support for customers including OEM manufacturing capabilities. And provide solutions for various power systems. It's honorable for Zhegui to share your progress, brilliance, and success!











To be Your Partner For Sustainability and Efficiency

We Provide solutions for various power systems by integrating advanced process and energy technologies to realize the full efficiency and sustainability opportunities for your business. Our integrated solutions are built with safety and reliability for buildings, infrastructure and industries. We provide safe and reliable products and high-quality after-sales service, adhere to the production philosophy of product quality first, customer first, your satisfaction is our motivation.

Customization

Support OEM&ODM, any specification according to your requirement.

Warranty

Each product comes with a qualified inspection certificate and a 12-24 month quality assurance

Rich Experience

13+ years of professional manufacturing e xperience, products are exported to various countries

Reasonable prices

Match the most suitable solution according to your budget expenditure.

Strong R&D Ability

Professional engineering team develop products that meet the requirement fo customers.

Professional Qualifications

Full range of product certifications, up to 50+, include CE, CCC, Test Report, CQC etc.....

Zhejiang Zhegui Electric Co.,Ltd

INTEGRITY WIN WIN, QUALITY INNOVATION

Certification Trustworthy

Quality management is the wing of the new era... .
Smooth communication, strict quality control, perfect details, pleasant business dealings...
In the new era, in a word, to make every customer can get the most perfect service, this is our consistent spirit of business.
We have been with their own professional and focus, won the praise and support of the industry, but also make the new era company to create a series of good enough to spread.



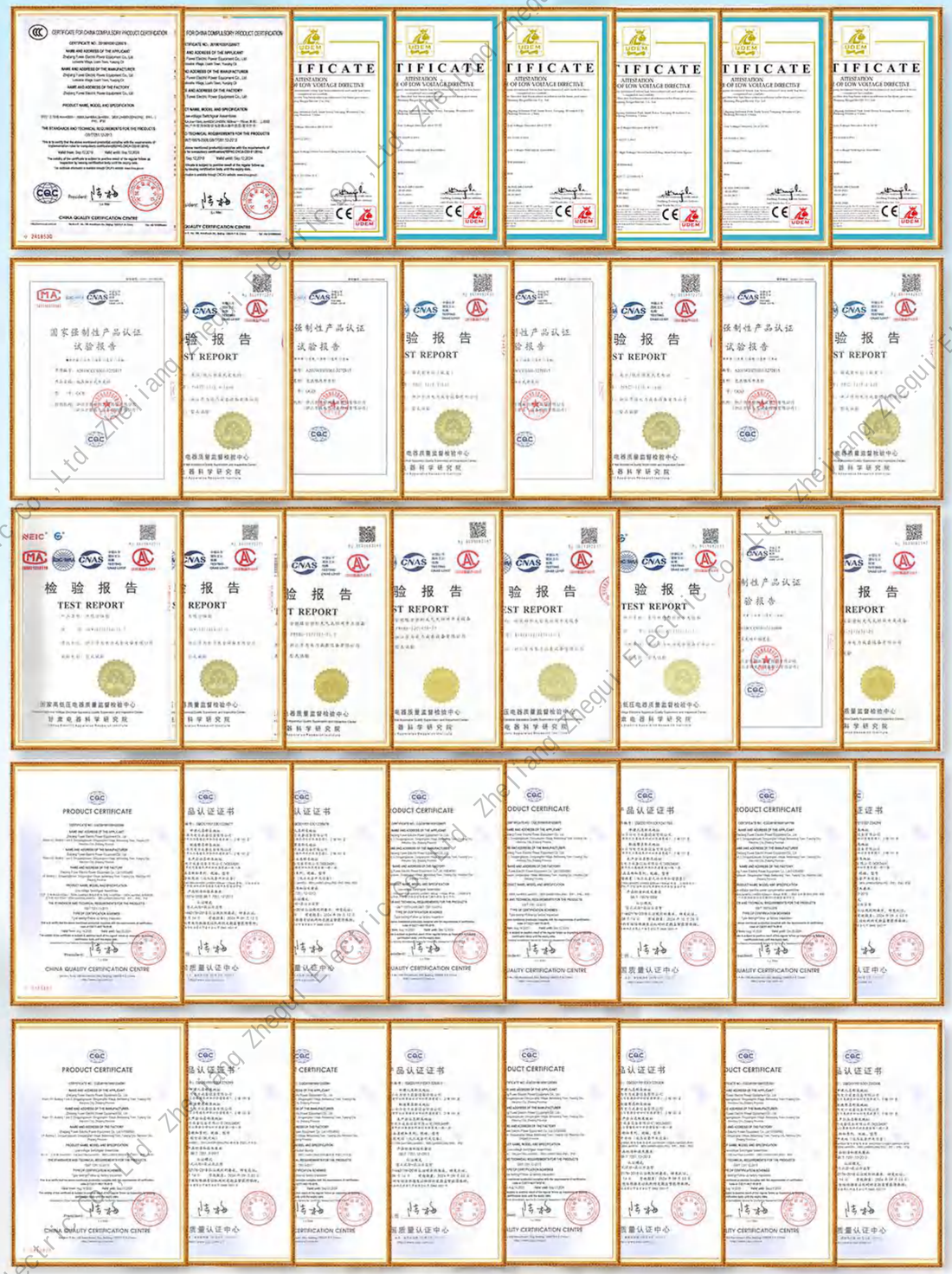

Zhejiang Zhegui Electric Co.,Ltd

04 Products Contents

Low Voltage Switchgear

Withdrawable Switchgear

GCK Type Low Voltage Withdrawable Switchgaer 01-02
GCS Type Low Voltage Withdrawable Switchgaer 03-04
MNS Type Low Voltage Withdrawable Switchgaer 05-06

Compensation Cabinet

GGJ Type LV Reactive Power Compensation Cabinet 07-08

Fixed Switchgear

GGD Type Low Voltage Switchgaer 09-10

DC Panel

GZDW Type DC Power Supply Panel 11-12

Middle Voltage Switchgear

AC Metal Enclosed Switchgear

KYN28-12 Type Armoured Open AC Metal-enclosed Switchgear 13-14
KYN28-24 Type Armoured Open AC Metal-enclosed Switchgear 15-16
KYN61-40.5 Type Armoured Open AC Metal-enclosed Switchgear 17-18

Ring Main Unit

XGN15-12 Type Unit AC Metal-enclosed RMU switchgear 19-20
XGN66-12 Fixed Metal-enclosed Switchgaer 21-22
HXGN Type Fixed Metal-enclosed Switchgaer 23-24
RM6 Type Fully Insulated Inflatable Cabinet 25-26

Distribution Cabinet

Distribution Control Panel

XL-21 Type Power Cabinet 27-28

Integrated Distribution Box

JP Type Integrated Distribution Box 29-30

Cable Distribution Box

DFW Type Cable Distribution Box 31-32

LV Distribution Box

PZ30 Type LV Lighting Distribution Box 33-34
JXF Type Low Voltage Distribution Box 35-36

Prefabricated Substation

America-Substation

YB-12/0.4 American Type Outdoor Prefabricated Substation 37-38

EU-Substation

YBM-12/0.4 EU Type Outdoor Prefabricated Substation 39-40

Mini Substation

DFWK Type Cable Distribution Box 41-42

Transformer

Dry type transformer

SC(B)10 Type Dry-type Power Transformer 43-44

Oil immersed transformer

S11-M Type Oil Immersed Transformer 45-46

Zhejiang Zhegui Electric Co.,Ltd

Vacuum Circuit Breaker

Outdoor Vacuum Circuit Breaker

ZW32 Type Outdoor Medium Voltage VCB 47-48
ZW20 Type Outdoor Column Medium Voltage intelligent VCB 49-50
ZW7 Type Outdoor Medium Voltage VCB 51-52
ZW8 Type Outdoor Medium Voltage VCB 53-54
LW3 Type Outdoor Medium Voltage VCB 55-56
LW8 Type Outdoor SF6 Medium Voltage VCB 57-58

Indoor Vacuum Circuit Breaker

VS1(ZN63A)-12 Type Intdoor Medium Voltage VCB 59-60
VS1(ZN63A)E-12 Fixed Pole Type Indoor Medium Voltage VCB 61-62
VS1(ZN63A)-12 Permanent Magnet Type Intdoor Medium Voltage VCB 63-64
VS1(ZN63A)-12 Side Mounted Type Intdoor Medium Voltage VCB 65-66

Switch

Medium Voltage Disconnector

GN19 Type Indoor Medium Voltage Disconnector 67-68
GN30 Rotary Type Indoor Medium Voltage Disconnector 69-70
GW4 Type Outdoor Medium Voltage Disconnector 71-72
GW9 Type Outdoor Medium Voltage Disconnector 73-74

Load Break Switch

FLN-36 Type Indoor SF6 Load Break Switch 75-76
FKN12 Type Indoor High Air Pressure Load Break Switch 77-78
FZN25 Type Indoor Vacuum Load Break Switch 79-80

Earthing Switch

JN15 Type Indoor Medium Earthing Switch 81-82

Zhejiang Zhegui Electric Co.,Ltd

GCK

Low Voltage Withdrawable Switchgaer

Overview

GCK low voltage draw out switchgear is composed of power distribution center (PC) cabinet and motor control center (MCC), which is suitable for power plant, substation, industrial and mining As an AC 5060hz, the maximum working voltage is 690V and the maximum working current is 3150A, the power users such as enterprises are used as power distribution and motor control The product meets iec439 standard and GB7251 low voltage cabinet, switchgear and control equipment National standard, with high breaking capacity, good dynamic and thermal stability, advanced structure, reasonable structure, practical electrical scheme, series and universality. All kinds of units of rich and rich In line, a cabinet body contains more return, saving land area, beautiful appearance, high green protection, safe curtain, convenient maintenance and other advantages

Environmental Requirements

1. Operating conditions: indoor;
2. Altitude: lt; 2000m;
3. The earthquake intensity is not more than 8 degrees;
4. Upper limit of ambient air temperature: +40℃;
5. Upper limit of average temperature for 24 hours: +35℃;
6.The lower limit of ambient air temperature :-5℃;
7. The relative humidity of the surrounding environment at +40℃ is 50%;
8. No fire, explosion danger, serious pollution and enough to corrode metal
and damage the insulation of gas and other bad places
9. No violent vibration, jolting place.



Model Description

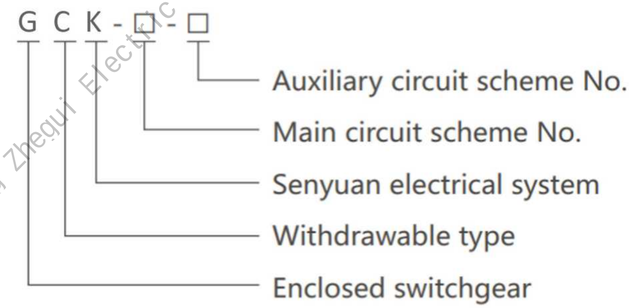

Technical Data

Sr.	Content		Unit	Value
1	Rated Operating Vbltage		V	380/690
2	Rated Insulation Voltage		V	660/1000
3	Rated Frequency		Hz	50
4	Main Bus-Bar	Rated Current	A	<3150
		Rated Short-time Withstand Current(Is)	kA	<80
		Rated Peak Withstand Current	kA	<143
5	Distribution Bus	Rated Current	A	<1000
		Rated Short-time Withstand Current(Is)	kA	<50
		Rated Peak Withstand Current	kA	<105
6	Imin Aux. circuit Frequency Withstand Voltage in Imin		kV	2
7	Rated Impulse Withstand Voltage		kV	8
8	Protect Degree		IP	The IP54 To IP54
9	Electrical Clearance		mm	>10
10	Creepage Distance		mm	>12.5
11	Over-voltage Level		-	III/IV
12	Class of Pollution		-	3

Zheiiang Zhegui Electric Co.,Ltd

GCS

Low Voltage Withdrawable Switchgaer

Overview

The device is used in power conversion, distribution and control of power distribution and motor control centers, capacitor compensation of LV power distribution system of power plants, substations, petrochemical departments, factories and mines, high-rise building

The device, when used in low-voltage power control center and the motor control center of the large capacity power plant, largescale petrochemical industries, can meet the special need to interface with the computers.

The device, depending on the requirements of users and design departments, can meet the special requirements to increase power capacity and interface with the computers.

The new type draw-out switchgear, designed depending on the principle of being safe, economic, reasonable and reliable, has such features as high breaking and making capacity, good dynamic thermal stability, flexible electric solutions, easy combination, strong practicality, novel structures and hiah dearee of protection and is the latest updated product. The device is in conformity with the standards of IEC439-1 "LV Complete Set of Switchgears and Control-gears", GB7251 "LV Complete Set of Switchgears". JB/T9661-1999 "LV Complete Set of Withdrawable Switchgears" and so on.



Environmental Requirements

1.The ambient air temperature shall not be higher than +40℃ and not be lower than -5℃, and the average temperature within 24h shall not be higher than +35 ℃.
2.If the temperature exceeds the above value, the device shall run with reduced capacity. When the air is clean, the relative humidity shall not exceed 50% at +40℃, and it may be higher at lower temperature, for example 90% at+20℃.
3.The impact of condensation resulting from temperature variation should be considered.
4.The inclination of equipment shall not exceed 5° at installation. The height above sea level in the place of use may not exceed 2,000m The medium shall be free from explosive hazard and not contain the gas and conducting dust which may corrode metals anc destroy the insulation.
5.The user's special requirements may be soved through consultation with the Company.

Usage

This device is widely applied to the power distribution systems of power plants, petroleum, chemical, metallurgical, textile and high-rise buildino industries. In the large power plants, petrochemical systems, etc. with high automation degree and with interface with computer, the device may serve as a low-voltage power distribution device used power distribution, motor centralized control and reactive power compensation of power generation and supply systems with AC three-phase frequency of 50 (60) Hz, rated operating voltage of 380V (400) (660), and rated current of 4,000A and below.

Model Description

G C S - □ - □

- Auxiliary circuit scheme No.
- Main circuit scheme No.
- Senyuan electrical system
- Withdrawable type
- Enclosed switchgear

Zhejiang Zhegui Electric Co.,Ltd

MNS

Low-voltage Draw-out Switchgear

Overview

MNS is a modular, multifunctional low-voltage distribution cabinet.It is applied to all low-voltage systems requiring high reliability field connection in the fields of metallurgy, petroleum,chemical, industrial and mining enterprises and infrastructure, etc. : distribution and motor control systems.MNS adopts a cabinet structure with a high degree of flexibility.According to your needs or different occasions of use, the cabinet can be installed in a variety of models and specifications of components;According to different electrical equipment, multiple types of feeding units can be installed in the same column cabinet or the same cabinet. For example: feed circuit and motor control circuit can be mixed together.

MNS is a full range of low voltage switchgear to meet your full range of requirements.Suitable for all low pressure systems up to 4000A.MNS can provide a high level of reliability and security.

The humanized design strengthens the necessary protection for personal and equipment safety.MNS is a fully assembled structure, and its unique profile structure and connection mode as well as the compatibility of variouscomponents can meet the requirements of harsh construction period and power supply continuity.

Executive standard: IEC439. GB7251.1O



Environmental Requirements

1. Ambient air temperature: from-5℃C to +40℃, and average temperature shall be not higher than +35℃ in 24h
2. Atmospheric conditions, relative humidity shall not be over 50% when the highest temperature is at +40℃. But higher humidity is allowed when temperature is lower, foe instance, humidity can be 90% when +20℃. It shall be taken into consideration that changes of temperature can accidentally cause condensation
3. Absolute elevation shall be not higher than 2000m. (Otherwise, the capacity shall be reduced)
4. The temperatures for transportation and storage of this device is from +25℃ to +55℃, in a short time (no longer than 24h) the limiting temperature can reach +70℃, in that case, unrecoverable damages will not occur on the device. In case the above service conditions are not satisfied, the user shall consult with the manufacturer.
5. If this device is used in offshore oil platforms or nuclear stations, another technical agreement shall be signed.

Usage

MNS LV withdrawable switchgears (here-in-after referred to switchgears), suitable for the power control and distribution system with AC 50-60Hz, rated working voltage up to 660V. are divided into 2 kinds ,they are: standard type and improved type, which are composed of PC cabinet and MCC cabinet. The switchgears are used for electric power control and distribution of motor control and lighting in power plants, substations and industrial and mining enterprises.

The switchgears can not only be used on land, but also used in offshore oil platforms and nuclear power stations after special treatments

Model Description

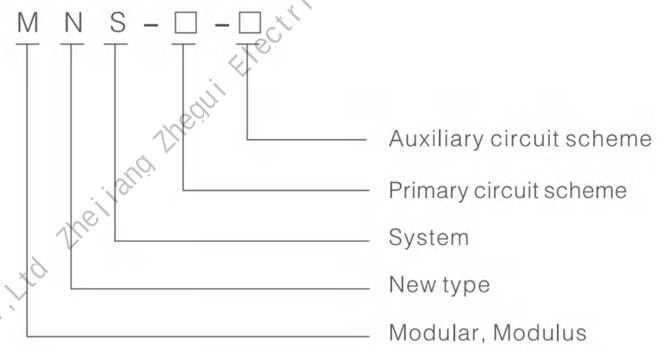

Zhejiang Zhegui Electric Co.,Ltd

GGJ

LV Reactive Power Compensation Cabinet

Overview

Transmission and distribution system is the sine wave voltage and current waveform of the fixed frequency. When the nonlinear load is like the thyristor rectifier, the frequency converter will generate a large amount ofharmonic curent, causina the voltaoe and current distortion.

Capacitor and power grid can fom a parallel resonant circuit, and the hamonic current amplification to 20 times as the nomal. The resonant frequency of the parallel resonant dircuit is close to the harmonic frequency in the power network. The harmonic current will cause the further voltaoe distortion, which is why power arid affected by harmonics can not be used for power factor compensation by the conventional capacitor.

When the power grid is in the presence of harmonics, the tuning filter should be used to compensate the power factor, A tuned filter, which is composed of capaditors and reactors in series. can compensate for inactivity without amplification.

Product standards and technical requirements

GB/T 1576-2008



Power factor compensation in the presence of harmonics

The tuned filter design used to the grid which generate harmonics for power factor compensation

Each section of the tuned fiter is composed of a reactor and capacitor in series, and a series of resonant circuit is fomed by the capacitor and reactor, and the resonance frequency is 5 times of the lowest harmonic in the power network.250Hz)The tuning frequency of the resonant circuit, such as the fundamental frequency, is capacitive, for the power grid, the reactive power is higher than the tuning frequency of the fiter is an electric sensibility,

This means that no other including 5 times, 7 times and 11 times of the ordinary harmonic will be amplified, and the filter can also absort a part of Low order harmonic in the power gnid. Different from the conventional capacitor group, each tuned fiter is controlled by an automatic power factor regulator according to the need of no power

Technical parameter

Rated voltage: Ina569A-82A
System voltage: AC380/AC400V
Rated capacity: 87.5-450kvar/cabinet
Resonant frequency: 141Hz and 189Hz, other frequency which to provicded based on the need sfsuch as 204Hz
Installation site: In the house
Temperature range: the lowest -5℃C, the highest +40℃,. 24 hours average mavimum +35 ℃, annual average +25℃
Degree of protection: P30

1. Powerfactor regulator
2. Fuse protector
3. Contactor
4. Peactor;
5. Capacitor
6. Air fitter



Zhejiang Zhegui Electric Co.,Ltd

GGD

AC Low-yoltage Power Distribution Cabinet

Overview

GGD AC low-voltage power distibution cabinet is applicable to power consumers of power plants, substations, industrial and mmining enterprises and is used for electric eneray conversion, distribution and control of power, lighting and power distribution equipment in power distribution system with AC 50Hz, rated operating voltage of 380V and rated operating current of up to 3,1 50AGGD low-voltaoe power distribution cabinet conforms to IEC61439 Low-voltage Switchoear and Controlaear Assemblies and GB7251 Low-voltage Switchgear and Controlgear Assemblies. Featuring high breaking capadity, good dynamic themmal stability, novel and reasonable structure, Perfect electric scheme , strona series and applicability and high degree of protection, the product. may be used as an upgraded product

Standards

This product shall conform to:
GB7251.1 Low-voltage Switchgear and Controlgear Assebles Part t: Ceneral Aulles
GB7251.12 Low-voltage Switchgear and Contralgear Assemblies Part 2: Power Switchgear and Controlgear Assemblies .
IEC61 439 Low-voltage Switchgear and Controlgear Assemblies



Environmental Requirements

1.Ambient air temperature: -15℃~+40℃ Daily average temperature: ≤35℃ When the actual temperature exceed the range, it should be used by reducing the capacity accordingly.
2.Transport and store temperature: -25℃~+55℃. do not exceed +70℃ in short time.
3.Altitude: ≤2000m
4.Relative humidity: ≤50%, when temperature is +40℃When temperature is low, larger relative humidity is allowed. when it is +20℃, relative humidity can be 90%. Since the temperature change will make out condensation.
5.Installation inclination: ≤5%
6.Applicable in the places without corrosive and flammable gas.
Note: Customized products are available.

Model Description

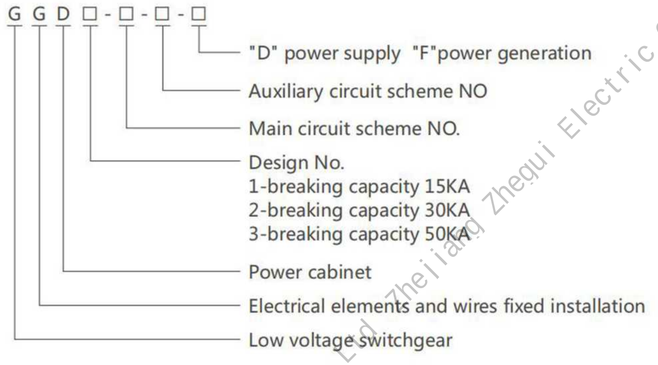

Technical Data

Type	Rated voltage (V)	Rated current (A)	Rated short-circuit breaking current (kA)	Rated short-circuit withstand current (Is)(IkA)	Rated peak withstand voltage (kA)
GGD1	380	A 1000	15	15	30
	380	B 600(630)	15	15	30
	380	C 400	15	15	30
GGD2	380	A 1500(1600)	30	30	63
	380	B 1000	30	30	63
	380	C 600	30	30	63
GGD3	380	A 3150	50	50	105
	380	B 2500	50	50	105
	380	C 2000	50	50	105

Zhejiang Zhegui Electric Co.,Ltd

GZDW

DC Power Supply Panel

Overview

DC panel used in large, middle and small power generating plant or substation, output DC source for the ON/OFF operation, relay protection, auto control, lighting tor high voltage switches at normal status or fault status. The reliability of DC panel is what other power source device can't substitute always. It can meet with such high reliability for the auxiliary power source in substation and power plant.

This series of DC panel has such features as: small size, high efficiency, high technical index, module design, n+1 heat redundancy backup, high reliability, module design (adopted the world latest advanced technology of "Resonant voltage dual loop control resonant switch power source"four remoteoperations, standard RS-485 and RS232 interfaces provided tor automation, also the other performances excel over the traditional power source of similar use.

Complied standards: GB/T 19826-2005 General specification and safety requirements for DC power supply equipment of power proiects. JB/T 5777-4-2000 The general specification and safety requirements for D.C power supply equipment of power system. JB/ 8456-1996 Low-voltage D.C switchgear and controlgear assemblies. DL/T 459-2000 Specifications of D.C supply cabinet in power system. DL/T 504195 Technical code for the design of fossil-fired power plant inner communication.

Environmental Requirements

•AC input
Input Voltage: AC 380V ± 20%
Frequency: 50 Hz ± 2%
•DC output
Output voltage: 110V or 220V
•Regulation accuracy: +0.5%
•Current regulator accuracy: +1%
•Ripple factor: s 0.5%
•And not all mobility: +3%
•Control bus:5A, BA, 10A, 12A, 15A, 20A, 30A, 40A, 50A、80A, 100A.
•Closing bus : 120A, 240A, 480A, 720A.



•Battery capacity
Lead-acid batteries : 7AH, 17AH, 40AH, 65AH, 100AH, 200AH, 300AH, 400AH. .500AH, 600AH, 800AH, 1000AH, 1500AH, 2000AH, 3000AH.

•Nickel-cadmium batteries : 10AH, 20AH, 40AH, 65AH, 100AH, 200AH, 300AH.400AH, 500AH.
•Degree of protection: IP30
•Input Power Factor: ≥0.93
•Charging efficiency: ≥95%
•Maximum noise (dB): ≤ 40
•Dielectric Strength: AC 2500V/1 min

Model Description

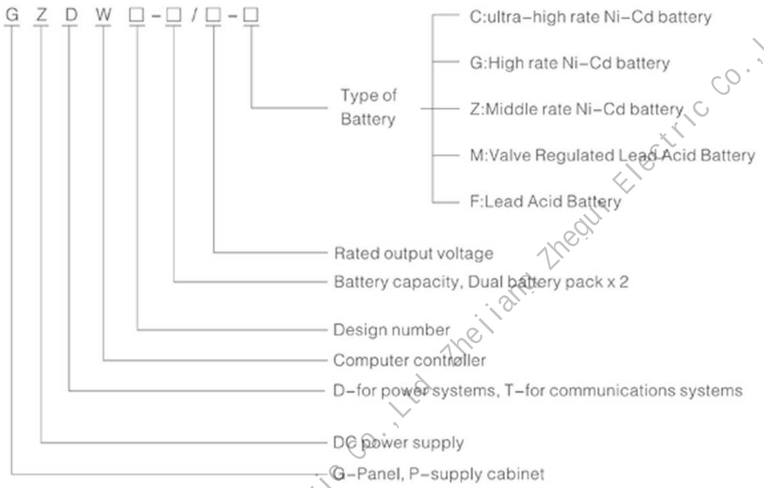

Zheiiang Zhegui Electric Co.,Ltd Zheiiang Zhegui Electric Co.,Ltd Zheiiang Zhegui Electric Co.,Ltd

KYN28-12

Armoured Open AC Metal-enclosed Switchgear

Overview

The KYN2BA-12 indoor AC meta-dad withodrawable switchgear (heranafter refered to as switchgaar) complete set of power distrbuion devces of 3.6ky- 12wV three-phase AC 50Hz single bua or shale bus sectiona avatem. The switchoear la manl uged n power dlarts, smal- and medium-szed power generators. industral and minina enterorises, and secondary substations of power avstem for power recaina, power transmisaon and startn of lame-azed hicth-oltage motor in oder t imbment control, protection, and monitar. The switchgear comples with IE062271 and GB3906 standards and comes out with a variety of protection funcions, including preventing pulling or pushing crcut beaker handcart in load mode, preverting turning onvoff the drcut breaker by mistake, preventing tuming on the clicuit breaker when the gounding switch is inON position, peventind ertering the energized cublice by mistake, and preventing tuming on the irntertock function of the grourding switch by mistake in eperized state. The switchoear can be used in coniunction with the VD4 drcuit beaker ofthe ARB omnan VS1 cir it hreeker isolation handcart, and yotaoe tranaformer, It s realy a hith-performance power distribution devioe.



Model Description

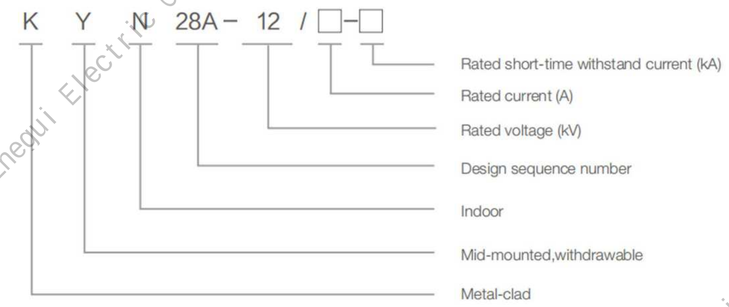

Environmental Requirements

Normal Operation Conditions

1. Altitude s 1000m
2. Ambient temperature: -10C-+40C temperature can be as low as 25℃C durina transportation and storage).
3. Relative humidity: daily relative humidity s 95% on average: monthly relative humidity s 90% on average
4. Seismic scale of earthquake s8
5. The switchgear is applicable to category III contaminated environment.

Special Operation Conditions

If the switchger will be usedin conditions that exceed the nomal envignmental condtions, uses shal negctate with the manufacturer.

Zheiiang Zhegui Electric Co.,Ltd Zheiiang Zhegui Electric Co.,Ltd Zheiiang Zhegui Electric Co.,Ltd

KYN28-24

Armoured Open AC Metal-enclosed Switchgear

Overview

The KYN28A-24 indoor AC metal-clad withdrawable switchoear (hereinafter referred to as switchaear) is a complete set of power distribution devices of 24kV three-phase AC 50Hz sinale bus or sinale bus sectional svstem. The switchoear is mainly used in power olants, small- and medum-sized power generators, industrial and mining enterprises, and secondary substations.of power system for power recaivina, power transmission, and startup of larae-sized hiah-yoltaoe motor in order to imolement control, pratection, and monitor. The switchaear comoles with IEC62271 and GB3906 standards and comes out with a variety of protectionfunctions, including preventina pullinga or pushing cirauit breaker handcart in load mode, preventina tumina an/of the circuit breaker by mistake, preventing turning on the circuit breaker when the arounding switch is in ON position, preventing entering the eneraized cubide by mistake, and preventina tuming on the interlock function of the grounding switch by mistake in.energized state. The switchoear can be used in coniunction with the VD4 dircuit breaker of the ABB comparv. ySl circuit breaker isolation handcart, and voltage transformer. It is really a high-performance power distribution device.



Model Description



Environmental Requirements

Normal Operation Conditions

1. Altitude s 1000m
2. Ambient temperature: -10C-+40C temperature can be as low as 25℃C durina transportation and storage).
3. Relative humidity: daily relative humidity s 95% on average: monthly relative humidity s 90% on average
4. Seismic scale of earthquake s8
5. The switchgear is applicable to category III contaminated environment.

Special Operation Conditions

If the switchger will be usedin conditions that exceed the nomal envignmental condtions, uses shal negctate with the manufacturer.

Zheiiang Zhegui Electric Co.,Ltd Zheiiang Zhegui Electric Co.,Ltd Zheiiang Zhegui Electric Co.,Ltd

KYN61-12

Armoured Open AC Metal-enclosed Switchgear

Overview

KYN61-40.5 Switchgear installed with excellent ZN85, ZN85B vacuum circuit breaker or Schneider SF1, SF2, or ABB HD4 or ALSTOM FP series SF6 circuit breaker, switchgear body is of compartment structure with beautiful figure, its busbar covered by heat shrinkable material or epoxy resin painting, optimized polar figure, the structure is compact, complete 5-prevent provided

KYN61-40.5 Switchgear operated in the power system of 40.5KV, three phases AC 50Hz, used to control, protect and monitor the distribution circuit of power generating plant, substation, minera enterprises and etc to distribute electric energy. Also it can be used to switch frequently on/off the circuit. Comply with GB3906 AC metal-enclosed switchgear and controlgear for rated voltages above 3 kV and up to and including 35 kV, GB/T11022 Common specifications for high-voltage switchgear and controlgear, IEC60298, IEC62271-200 AC metal-enclosed switchgear and controlgear for rated voltage above 1 kV and up to and including 52 kV, IEC60694 Common specifications for high-voltage switchgear and controlgear standard



Model Description

K Y N 61 - 40.5 - □/□□□ - □□

- Primary circuit scheme
- Rated short circuit breaking current or Rated short time withstand current (KA)
- Rated current(A)
- Special service conditions
  - TH: Wet tropic zone
  - G: High altitude zone
  - TA: Dry tropic zone
  - H: Deep cold zone
  - N:Dew zone
  - F: Corrosive zone
  - W:Pollution zone
- Operating mechanism type
  - T: Spring D: Electromagnetic
  - J: Motor S: Manual
- Main circuit breaker type
  - Z: with Vacuum circuit breaker
  - L: with SF6 circuit breaker
- Rated voltage (kV)
- Design No.
- Indoor
- Movable type
- Metalclad type

Environmental Requirements

1.Ambient air temperature

Maximum air temperature: +40℃.

Minimum air temperature:-15℃ (Under a special process, up to -45 ℃);

2.Altitude: < 2500m(Under a special process, up to 4000m);

3.Humidity:

Daily average value of relative humidity: <95%

Monthly average value of relative humidity: <90%

4.Earthquake grade less than Degree 8

5.The ambient air is not significantly polluted by dust, smoke, corrosive and/or flammable gases, vapours or salt.

6. Notes: If the operating conditions exceed the normal conditions, please contact our technical department.

Zhejiang Zhegui Electric Co.,Ltd

XGN15-12

Unit AC Metal-enclosed RMU switchgear

Overview

XGN15-12 Fixed AC metal-enclosed switchgear (hereinafter referred to as "switchgear"), used as an indoor complete distribution equipment for receiving and distributing electric energy in a three-phase AC 50/60Hz system with rated voltage 3.6-12kV. It has the function of circuit protection and detection. Its bus system is single bus and single bus with bypass bus, and can be derived from, double bus structure. The switchgear conforms to the requirements of national standards GB3906 and DL/T404, and has a complete set of reliable performance, complete functions, simple structure, convenient operation of the mechanical anti-error locking device, simple and effective to meet the "five" locking function requirements proposed by the two.

Environmental Requirements

1. Ambient temperature: not higher than + 40 ℃, not lower than - 15 ℃. Within 24 hours, the averageThe temperature should not exceed + 35 ℃.
2. Altitude: no more than 1000m.
3. Relative humidity: the daily average value shall not exceed 95%, and the monthly average value shall not exceed 90%.
4. Seismic intensity: no more than 8 degrees.
5. Water vapor pressure: the daily average value shall not exceed
2.2kpa, and the monthly average value shall not exceed 2.2kpa1.8kPa
6. No fire, explosion, serious pollution, chemical corrosion and violent vibrationIt's a good place.



Model Description



Product features

1. Xgn2-12 switchgear is a metal enclosed box structure, and the cabinet frame is welded by angle steel and copper plate.
2. The cabinet is divided into circuit breaker room, bus room, cable room and relay room, and each room is separated by steel plate.
3. The front and rear doors of the switchgear are installed off the wall and maintained on both sides.
4. There is a pressure relief channel on the top of the switch cabinet. In case of internal arc fault, the pressure and gas can be released from the pressure relief channel to ensure the safety of operators.
5. The switchgear has perfect and mature "mechanical five prevention" and simple and clear operation procedures.
6. ZN28A-12, ZN63A-12, VS1 and other series vacuum circuit breakers are used as the main circuit breaker of the switch cabinet. Other types of circuit breakers can also be equipped as required Ct19 spring operating mechanism.
7. The disconnector adopts gn30-10 rotary disconnector and gn22-10 high current disconnector.

Zheijang Zhegui Electric Co.,Ltd

XGN66-12

Metal-enclosed Switchgaer

Overview

XGN66A-12 Case fixed metalclad movable switchgear (hereinafter called switchgear), is used in the system of rated voltage 3.6~ 12KV three-phase, AC50Hz, to receive and distribute electricity, suits for frequently switching, or reconstruction of switchgear with oil type breaker.Busbar system is single busbar system or single busbar with branches.

Comply with GB3906 AC metal-enclosed switchgear and controlgear for rated voltages above 3 kV and up to and including 35 kV, DL/T404 Purchase technical specifications for indoor AC high voltage switchgear, IEC60298 AC metal-enclosed switchgear and controlgear for rated voltage above 1 kV and up to and including 52 kV standard.The switchgear has good fiqure, small size provides complete prevention of wrong operation. The main switch of the switchgear adopted VS112 or ZN28-12 vacuum circuit breaker type GN30-12 or GN19-12 isolator, and JN 15-12 earth switch

Environmental Requirements

1.Ambient air temperature:
Maximum air temperature: +40℃
Minimum air temperature: -15℃ (Under a special process, up to -45 C);
2.Altitude: 2500m(Under a special process, up to 4000m);
3.Humidity:
Daily average value of relative humidity: ≤95%
Monthly average value of relative humidity: ≤90%
4.Earthquake grade less than Degree 8
5.The ambient air is not significantly polluted by dust, smoke, corrosive and/or flammable gases, vapours or salt.
6.Notes: If the operating conditions exceed the normal conditions, please contact our technical department.



Model Description

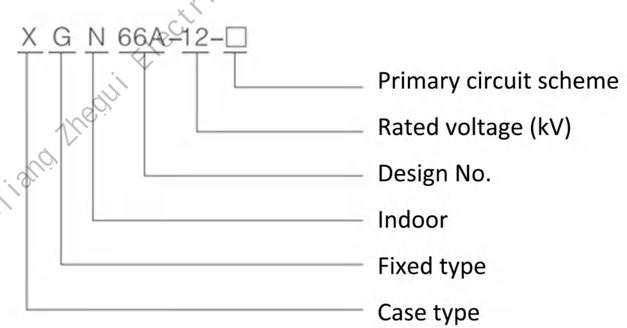

Structural features

1.Structure of switchgear as Fiqure1
2.The switchgear is of case fixed structure, switchgear body made of thin steel sheet and angular steel being welded. Top back of switchgear is busbar compartment. the pressure relief device set on top, top front is relay compartment, smallbusbar can be connected from bottom through cables, middle and downside part of switchgear are interworking. busbar compartment to be electrically connected with the high voltage apparatus in middle and downside switchgear through GN30 rotation type isolator, vacuum circuit breaker installed in the middle, earth switch or outgoing isolator installed downside, CT, PT, arrester installed in back, primary cable outgo from back of switchgear, on the bottom earthing busbar is fixed, passing through all switchgears in row. isolator and earth switch is operated from the left of front panel.
3.The switchgear adopt the mechanical interlock device, simple and easy to operate, to realize five-prevents a. This interlock function is to ensure that after breaker is opened completely, then the user can pull the handle out from ON position and rotate in right direction to OFF & LOCKED position, open/close isolator. This is to prevent closing/opening isolator with load
b.When breaker, upside and downside isolators are in ON position, handle in ON position, front door can't be opened, this is to prevent wrong access to live (electrified) compartment:
c. When breaker, upside and downside isolators are in ON position, handle can't be rotated to REPAIR or OFF & LOCKED position, to prevent wrongly opening breaker, when handle in OFF AND LOCKED position, it can only open the upside and downside isolators, can't close circuit breaker, wrong operation is avoided.
d. When upside and downside isolators are not opened, earth switch can't be closed, handle can't be rotated from OFF & LOCKED position to REPAIR position, this is to prevent being grounding under electrified
Note: According to different design arrangement, some switchgear will have no downside isolator, or replaced by earth switch, their interlock function and five-prevents can be met as well

Zhejiang Zhegui Electric Co.,Ltd

HXGN

Fixed Metal-enclosed Switchgaer

Overview

HXGN-12 Fixed Metal Closed Switchgear (Hereinafter referred to as "Ring Grid Cabinet")) is a three-phase AC converter with rated voltage of 10kV and rated power of 50/60Hz. It belongs to closed switchgear and is suitable for power distribution system, ring network power supply or double current radiation power supply system in factories, workshops, residential buildings and other places. It plays a role in receiving, distributingand protecting, and is also suitable for box substations.

Environmental Requirements

1. Operating conditions: indoor.
2. Altitude: < 1000m.
3. Seismic intensity: no more than 8 degrees.
4. Pollution level: 11.
5. Ambient temperature: - 15 ℃ - + 40 ℃
6. Relative humidity: daily maximum average < 95%, monthly maximum average = 90%.
7. There is no danger of fire, explosion, serious pollution and corrosion of metalAnd damaging the insulation of the gas and other bad places.
8. There is no place with violent vibration, turbulence and vertical gradient less than 80.



Model Description

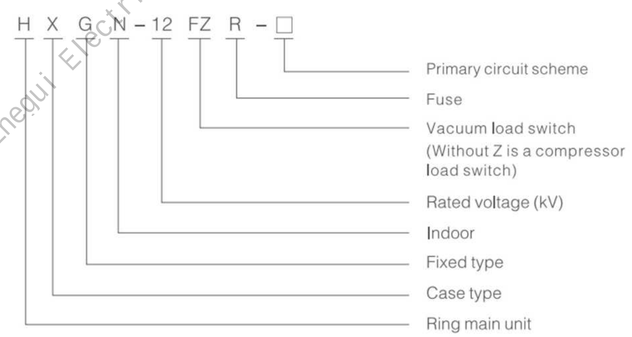

Structural features

1. The switch cabinet body is assembled with 8MF section steel and separated into bus room, switch cable room and instrument room with metal partition.
2. The cabinet is of assembled structure, stable and reliable, and easy to extend and combine.
3. The load switch has a static contact insulation cover, which can effectively prevent arc short circuit accident in the cabinet and ensure the safe operation of the equipment.
4. The load switch has a unique metal valve and grounding structure. After the load switch is opened, the valve will automatically close and separate the fracture to ensure that there is no electricity in the switch cable room, Realize the purpose of separating from the live main bus compartment.
5. The load switch is usually side mounted, and the three phases are arranged in front and back, so the cabinet is small in volume and the floor area is reduced.
6. This product uses the compressed air load switch as the main component, and uses the compressed air principle to extinguish the arc, with stable and reliable breaking performance.
7. The load switch, grounding switch and fuse are assembled as a whole, with reliable locking device, meeting the requirements of "five prevention" function.
8. In order to optimize the operation of ring main unit, electric mechanism, communication module and other equipment can be installed to ensure the remote control and automatic management of power grid.

Zheiiang Zhegui Electric Co.,Ltd

RM6

Fully Insulated Inflatable Cabinet

Overview

RM6(XGN□)-12 fully insulated fully enclosed compact switchgear, which can realize functions of control, protection, measurement, monitoring, communication, etc. is especially suitable for places with small distribution facility site and high reliability requirements, and places with a relatively harsh natural environment and conditions, such as underground, highland and coastal areas. It is mainly used in areas where land is tight and space is limited, high reliability is required, like industrial and mining enterprises and substations, subways, light rail railways, etc. It combines microprocessor technology, modern network communication technology and new switch manufacturingtechnology to effectively separate and combine load current and short circuit current. The measurement protectioncontrol and communication functions configured inside the device can fully meetthe requirements of the distribution automation system. The conductive parts of the high voltage components such as circuit breakers, three working position switches and load break switches in the main circuit are installed in a sealed cabinet-type stainless steel casing. The biggest feature is that it is not affected by the external environment, and has high reliability and can make the equipment run safely for a long time in places with poor environment; secondly, the size of the high voltage omponent is reduced, the device is miniaturized, and the parts inside the sealed casing are free from corrosion and rust, thereby eliminating the influence. In addition, with high voltage components with stable performance and long electrical life, maintenance-free or less maintenance requirements can be achieved.

Environmental Requirements

1.Ambient air temperature: -40℃~+40℃;
2.Relative air humidity: daily average ≤95%, monthly average ≤90%;
3.Altitude ≤1500m (under standard inflation pressure);
4.Seismic intensity ≤9 class;
5.Places free from fire, explosion, serious contamination, chemical corrosion and severe vibration.



Model Description

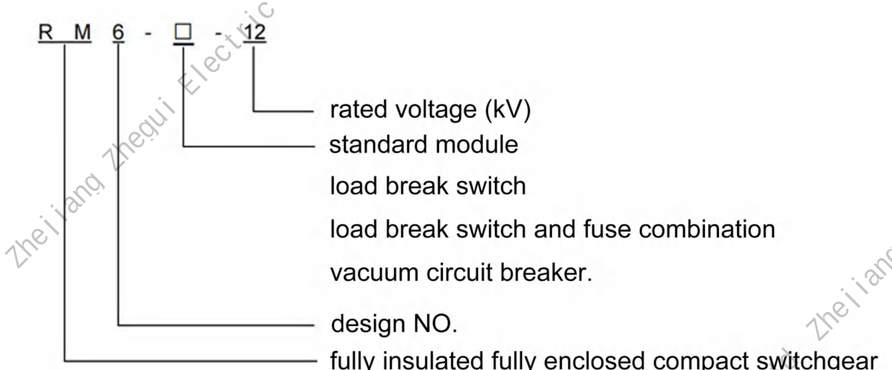

Structural features

Modular design

The switch is divided into fixed module and expandable module group. In the same SF6 insulated air chamber, up to 6 modules can be configured. Switching cabinets with more than 6 modules must be connected with the expansion busbar to realize the semi-module. Structure; full module configuration can also be achieved by using an extended bus between all modules. Through the combination of different functional modules, a simple to complex power distribution scheme can be formed to meet various configuration requirements in the secondary substation and the opening and closing.

Compact structure

Except for the air-insulated metering cabinet, all modules are only 325mm wide and the metering cabinet width is 695mm; the cable joints of all units are the same height to the ground, which is convenient for on-site construction.

Unaffected by the environment

All high-voltage live parts are installed in a sealed stainless steel case. The case is welded with a stainless steel plate and filled with

SF6 gas at a working pressure of 1.4 bar. The degree of protection is IP67. It can be used in places where it is installed in damp, dusty, salt spray, mine, box-type substation and air pollution. Even the fuse compartment has an IP67 rating. The extension busbars are completelyinsulated and shielded to ensure that they are not affected by changes in the external environment.

Highly reliable personal safety

All live parts are enclosed in the SF6 air chamber; the switch has a reliable pressure relief channel, the load and grounding switches are three-position switches, simplifying the interlocking between each other; reliable mechanical interlock between the cable compartment cover and the load switch .

Zheiiang Zhegui Electric Co.,Ltd

XL-21

Low Voltage Power Cabinet

Overview

XL-21 LV closed type power panel can be used in AC 500V or lower system of three-phase three-wire, three-phase four-wire, three-phase five-wire for electricity-generating and mine enterprises, aso for the purpose of power, lighting, distribution. XL-21 ype low voltage power panel has flexible distribution scheme, conven ient combination, good practical performance, new structure and etc.

Environmental Requirements

1. Altitude: <2000m;
2. The indoor environment shall be non-ash, non-corrosion gas, and rainwater-proof;
3. Ambient temperature:-25℃-+40℃, the measured average temp. in 24 hours: 35℃; the temp. under storage and transportation condition:-25℃-+55℃, the temp. in short time <70℃;
4. Relative humidity under the highest temp. of 40℃: <50%;
5. No vibration and the oblique mounting angle: <5℃.



Model Description

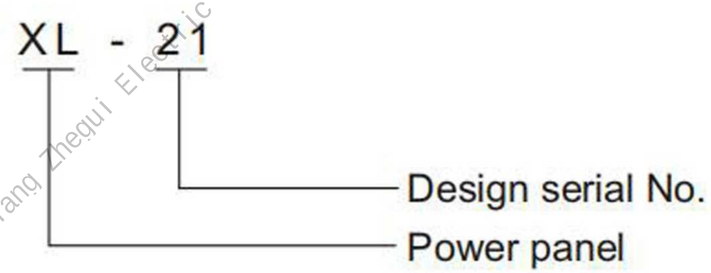

Structural features

1. Main electrical performance shall completely comply with regulations of IEC60439-1:1992,GB7251.1-1997.
2. The auxiliary circuit has functions of local/remote, remote, automatic control and in-site/remo te, remote control switch. The contactor can adopt DC protection.
3. Receiving main switch has optional protection of instart trip and pyromagnetic trip. Can cancel instant protection for matching next class main-switch, avoid skip-class tripping, and has functions of motor/manual operation and automatic switch.
4. Main switch of fe eding circuit has protection of instant trip and pyromagnetic trip. Can add fault protection if customer required.
5. The motor control circuit has protection of short-circuit instant, overload, undervoltage release and phase-break.
6. Ammeter and voltage meter for incoming circuit.

Zhejiang Zhegui Electric Co.,Ltd

JP Box

Integrated Distribution Box

Overview

SVS outdoor low voltage reactive power automatic compensation box suitable for urban and rural power distribution transfome low voltage side, Function of distribution, control power, protection equipment and so on . At the same time can be monitored in eal-time, display, record with operating data and realize remote data transmission, realize low voltage reactive power automatic compensation, can effectively improve the quality of power supply, to provide the power supply reliability, reduce reactive powet loss, reduce power loss rateSVS outdoor low voltage reactive power automatic compensation box running data to achieve with GPRS real-time communication and can be linked to the original background system application

Product standards and technical requirements

GBIT 15576-2008



Working Conditions

a.The ambient air humidity is not higher than +45℃, and no less than-10℃ , and the daily average temperature is not higher than +35℃

b.Outdoor installation, with the ability to work in All day outdoor environment

c The air relative humidity when it is+25 ℃ less than 95%, should be taken into account due to changes in the environment may occasionally produce moderate condensation.

d.The surrounding medium is not explosive and flammable and is not enough to damaoe the insulation and corrosion of metal gas no electric quste. Installation site without severe vibration and bumps, according to the inclination of not more than 5°

f. The use of voltage fluctuation range is not more than the rated working voltage of ±10%, the limit voltage is not more than +20% of the rated working voltage, when the use of conditions or other requirements, by negotiated with manufacturer and user.



1) Rated operational voltage: AC380V 50Hz
2) Rated insulation voltage: AC6900
3) Clearance: 210mm
4) Creepage distance: 214mm
5) Compensation capacity: 146-6kvar
6) Main switch rated current: 630-100A
7) Degree of Protection: IP44
8) Loop number, according to customer requirements configuration, single-phase, three-phase combined compensation

Zheiiang Zhegui Electric Co.,Ltd

DFW

Cable Distribution Box

Overview

The Cable Branching Switchgear is the transfer station for cable to transmit electric energy, used for connecting, shunting, branching, continuing or transferring cables outdoors. It features simple, convenient, and flexible connecting ways, full insulation structure, corrosion resistance, anti-pollution, high safety and reliability.DFW D-12 Cable Branching Switchgear is a new power supply equipment designed by us for being used with 10kV power grid cable system, which is widely used at cable joints in 10kV system for receiving and distributing the electric energy. The cable distribution box of this series has unique structure and aesthetical appearance, especially suitable for city streets, residential quarter, high-rise building, airport, and wharf and other sites with small building area and serious requirements for the environment.



Model Description

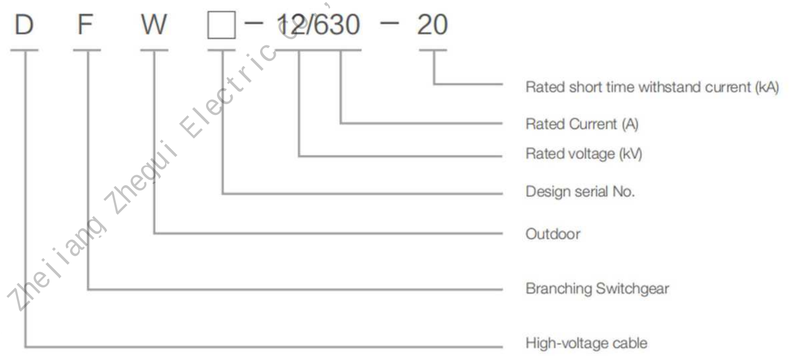

Normal Operating Conditions

A. Altitude not greater than 1000m;
B. Ambient temperature -25℃ to +40℃;
C. Wind speed s 34m/s
D. No frequent severe vibrations

Zhejiang Zhegui Electric Co.,Ltd

PZ-30

LV Lighting Distribution Box

Overview

PZ30 consumer unit is one of termination combination electric box. suitable for various living house, high buildings, hotel, marketplace, hospital, mineral enterprise and etc. Comply with GB7251.3-2006 Low voltage .switchgear and controlaear standard

Environmental Requirements

1.Rated operating voltage: AC380V or AC220V
2.Maximum rated operating current: 100A
3.Rated insulation voltage: 500V
4.Rated Frequency: 50Hz
5.Degree of protection: IP30
6.Rated short-time withstand current: 6KA



Mainly technical parameters

No. 1	4 circuits mounted units	Type PZ30-4A/M	Size of flush mounted panel （mm）		Size of flush mounted box, size of suspension mounted type （mm）		
			H 170	W 175	H1 150	W1 145	D 90
2	6 circuits mounted units	PZ30-6A/M	225	210	185	200	90
3	8 circuits mounted units	PZ30-8A/M	225	245	220	200	90
4	10 circuits mounted units	PZ30-10A/M	285	285	260	260	90
5	12 circuits mounted units	PZ30-12A/M	285	320	295	260	90
6	15 circuits mounted units	PZ30-15A/M	285	375	350	260	90
7	18 circuits mounted units	PZ30-18A/M	285	425	400	260	90
8	Single-row 20 circuits mounted units	PZ30-20A/M	285	465	440	260	90
9	Double-row 20 circuits mounted units	PZ30-20A/M	485	285	260	460	90
10	Double-row 24 circuits mounted units	PZ30-24A/M	485	320	295	460	90
11	Double-row 30 circuits mounted units	PZ30-30A/M	485	375	350	460	90
12	Double-row 36 circuits mounted units	PZ30-36A/M	485	425	400	460	90
13	row 45 circuits mounted units	PZ30-45A/M	690	375	350	665	90

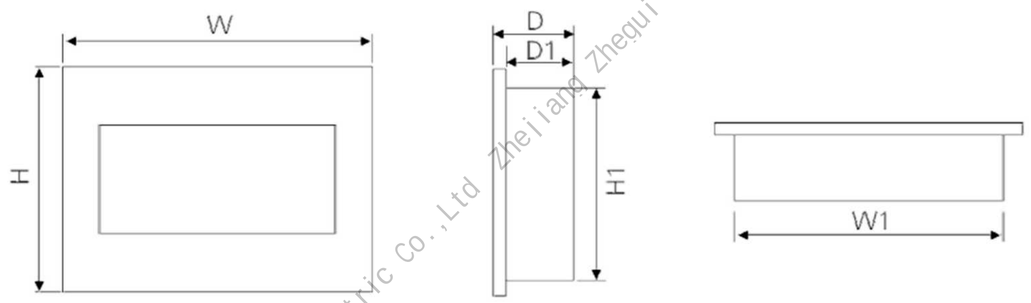

Zhejiang Zhegui Electric Co.,Ltd

JXF

Low Voltage Distribution Box

Overview

It suits for operating in the circuit of AC 50Hz, rated operating voltage 500V and below, in some special cases, the protection grade can reach up to IP55, the top and bottom of the panel will provide knockout holes, if multiple pipes are used for incoming lines, opening plate can be prepared, maxi rated current up to 400A, especially suitable for usage in metering and control box of mining field, hotel, living buildings and etc. Comply with GB7251.12-2013 Low voltage switchgear and controlgear, IEC60439-2:2011 Low voltage switchgear and controlgear standard.

Environmental Requirements

1.Ambient air temperature: -25℃-+40℃;
2.Humidity: <50%(at +40℃)
3.Altitude: < 2500m;
4.Rated operating voltage: 230V 400V
5.Rated operating voltage: 400A
6.Rated short-circuit breaking capacity: 80kA
7.Degree of protection: IP55



Model Description

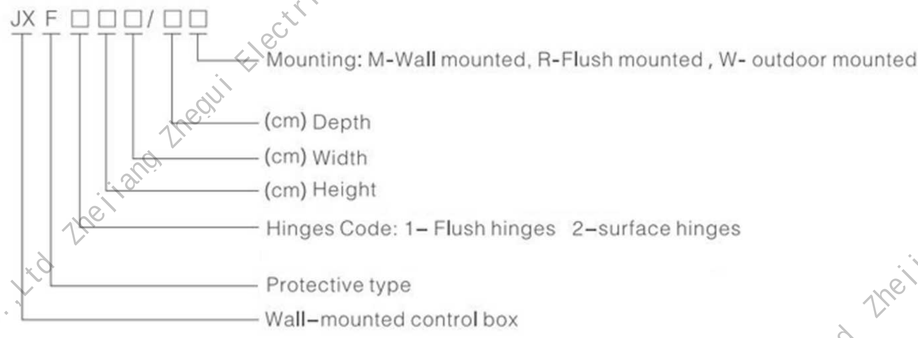

Structural features

Type	Specifications HxWxD(mm)	Type	Specifications HxWxD(mm)
JXF1-2525/14	250 x 250 x 140	JXF1-6040/23	600 x 400 x 230
JXF1-3025/14	300 x 350 x 140	JXF1-6050/14	600 x 500 x 140
JXF1-3025/18	300 x 350 x 180	JXF1-6050/20	600 x 500 x 200
JXF1-3030/14	300x300x140	JXF1-6050/23	600 x 500 x 230
JXF1-3030/20	300 x 300 x 200	JXF1-7050/16	700 x 500 x 160
JXF1-4030/14	400 x 300 x 140	JXF1-7050/20	700 x 500 x 200
JXF1-4030/20	400 x 300 x 200	JXF1-7050/25	700x500x250
JXF1-5040/14	500 x 400 x 140	JXF1-8060/20	800 x 600 x 200
JXF1-5040/20	500 x 400 x 200	JXF1-8060/25	800x600x250
JXF1-5040/23	500 x 400 x 230	JXF1-10080/20	1000x800x200
JXF1-6040/14	600 x 400 x 140	JXF1-10080/25	1000x800x250
JXF1-6040/20	600x400x200	JXF1-10080/30	1000x800x300

Zheiiang Zhegui Electric Co.,Ltd

YB

Outdoor Prefabricated Substation

Overview

1.Rating: Rated voltage : HV equipment10KV and 12KV, LV equipment 0.4 KV.Rated current :HV equipment 630A, LV equipment 1500A.
2.Application: YB27 series substation is American type combined substation withfunction of high voltage control, protect, power transformation and distribution.Usually used in urban and rural power distribution system .The high voltage loadswitch and high voltage fuse of this product are installed in the oil of the transformer, with the two structure: in same case with the transformer and indifferent case with transformer. It can be used in high-rise buildings, building inurban and rural areas, residential communities ,high-tech development areas,small and medium size factories, mining areas, oil fields, temporary constructionsites, and other premises.
3.Standard: IEC1330

Model Description

Model Description

1.Ambient air temperature: -30℃~+40℃
2.Altitude: ≤1000m
3.Wind speed:34m/s ≤700pa
4.Relative humidity: Daily average relative humidity≤95%.Monthly average relative humidity≤95%.
5.Installation inclination:≤grade 8 .
6.Applicable in the places without corrosive and flammable gas.
Note: Customized products are available.

Zhejiang Zhegui Electric Co.,Ltd

YBM

Outdoor Prefabricated Substation

Overview

1.Rating:
Rated voltage: HV equipment 7.2KV and 12KV, LV equipment 0.4 KV. Rated current: HV equipment 630A, LV equipment 100-2000A.
2.Application: YBM22 series substation is a kind of compact power distribution device that integrates high voltage electrical equipment, transformer and low voltage electrical equipment. It can be used in high-rise buildings, building in urban and rural areas, residential communities, high-tech development areas, small and medium size factories, mining areas , oil fields, temporary construction sites, and other premises. It also can be used for acceptance and distribution of power in power distribution system of 6-15KV, 50HZ (60HZ), ring main power distribution system and double power supply or radiate terminal power distribution system.
3.Feature: High integrity, small size, compact structure, safe and reliable operation, convenient maintenance, portable, etc. Compared with conventional civilengineering substation, in the same capacity, the prefabricated combined substation need only 1/10~1/15 floor area. So that the construction expense is reduced.
4.Standard:IEC1330



Model Description

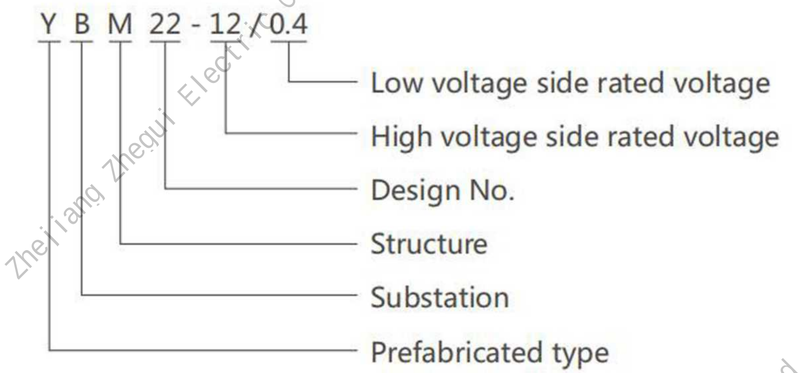

Model Description

1.Ambient air temperature: -10℃~+40℃
2.Altitude: ≤1000m
3.Solar radiation: ≤1000W/m
4.Ice cover: ≤20mm
5.Wind speed: ≤35m/s
6.Relative humidity: Daily average relative humidity≤95%.Monthly average relative humidity≤90%.
Daily average relative water vapour pressure ≤ 2.2kPa. Monthly average relativewater vapour pressure ≤1.8kPa.
7.Earthquake intensity: ≤magnitude 8.
8.Applicable in the places without corrosive and flammable gas.
Note: Customized products are available.

Zheiiang Zhegui Electric Co.,Ltd

SC(B) 9/10

Dry-type Power Transformer

Structural Features

1.Iron core
Made up of high quality cold rolled silicon steel sheet that is for electric engineering
2.Low voltage winding
Made up of a whole copper foil coi
3.High voltage winding
Made up of sectional type vacuum casting double glass-fiber covered coils
4.Low voltage terminal
5.High voltage terminal
Variable wiring mode, which is convenient for installation
6.Resilient pad
Avoid mechanical resonance, and reduce noise
7.Clamp and trolley
The wheel of trolley can rotates to 90°
It is convenient for vertical and horizontal movement.
8.Packing type resin insulation
With advantages of damp proof, anti-damp and hot, flame-retardant, and self-extinguish.

Environmental Requirements

1.Ambient air temperature:
Maximum air temperature: +40℃
Minimum air temperature:-15℃ (Under a special process, up to-45 ℃);
2.Altitude: < 2500m(Under a special process, up to 4000m);
3.Installation environment inclination of installation lace<3 .no obvious dirt and corrosive or flammable gas.
4.Notes: If the operating conditions exceed the normal conditions, please contact our technical department.



Model Description

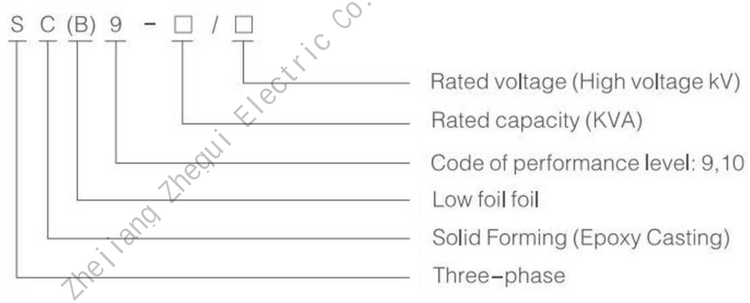

Technical Data

(kVA) Rated capacity	Voltage combination			Connection symbol	Short circuit voltage (%)	Loss(kW)		No-Load current(%)	Weight (kg)	Dimensions LxBxH(mm)	Gauge Vertical x horizontal(mm)	Shell Dimensions LxBxH(mm)
	H.V (kV)	Tapping range	L.V (kV)			No-load	120°C Load					
30	11 10.5 10 6.3 6	±2x2.5%	0.4	Yyno Dyn11	4	0.18	0.71	2.20	275	800x460x739	400x400	1100x900x1100
50						0.25	1.00	2.10	360	840x460x769	400x400	1200x900x1100
80						0.33	1.38	1.80	475	910x460x839	400x400	1200x920x1200
100						0.36	1.57	1.60	570	950x820x896	550x760	1300x1050x1250
125						0.42	1.85	1.50	625	950x820x926	550x760	1300x1050x1250
160						0.49	2.13	1.40	755	1020x880x916	550x760	1300x1250x1300
200						0.58	2.53	1.35	820	1030x880x966	550x820	1300x1250x1300
250						0.66	2.76	1.30	990	1050x880x1011	550x820	1350x1250x1350
315						0.78	3.47	1.20	1085	1050x880x1035	660x820	1400x1270x1400
400						0.98	3.99	1.10	1305	1110x970x1111	550x820	1500x1200x1450
500						1.16	4.88	1.10	1425	1110x970x1141	660x910	1500x1200x1500
630					6.0	1.34	5.88	1.00	1590	1280x1120x1096	660x910	1650x1350x1500
800						1.52	6.96	0.90	1900	1320x1170x1176	820x1110	1700x1400x1550
1000						1.77	8.13	0.85	2260	1370x1170x1286	820x1110	1750x1400x1650
1250						2.09	9.69	0.80	2780	1420x1170x1446	820x1110	1800x1400x1800
1600						2.45	11.73	0.75	3355	1440x1140x1607	820x1070	1800x1450x2000
2000						3.05	14.45	0.70	3865	1580x1140x1690	820x1070	1900x1500x2050
2500						3.60	17.17	0.65	4720	1620x1140x1735	1070x1070	2000x1550x2200

Zhejiang Zhegui Electric Co.,Ltd

S9/S10 (10KV)

Oil Immersed Transformer

Overview

This kind of product is applied to power system of three-phase, 50Hz 60Hz as well as 35kV and below, it is the main transformer equipment of medium and small-sized transformer substation, supplies power distribution, power and illurmination for the industry and agriculture. The company introduces in domestic and overseas advanced technique, adopts the latest material and optimizes design, which enables the product structure more reasonable, and greatly improves the product electric strength, mechanical strength and heat-sinking capability. S9 series product has passed the short-circuit test prepared by Wuhan High Voltage Research Institute and also the test prepared by National Center for Quality Supervision & Test of Transformer

Environmental Requirements

1.Ambient air temperature:
Maximum air temperature: +40℃.
Minimum air temperature:-15℃ (Under a special process, up to -45 ℃C):
2.Altitude: s 2500m(Under a special process, up to 4000m):
3.Installation environment inclination of installation lace<3 no obvious dirt and corrosive or flammable gas
4.Notes: If the operating conditions exceed the normal conditions, please contact our technical department.



Model Description

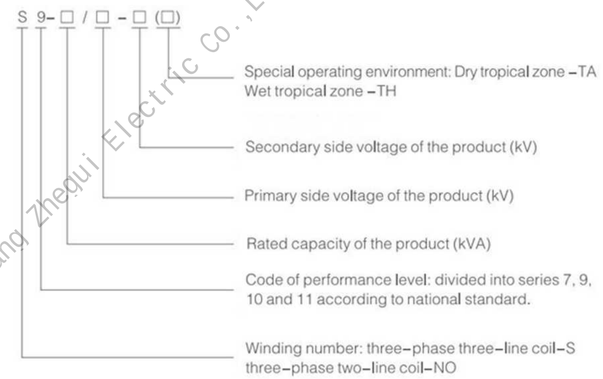

Structural Features

1.Iron core
The iron core is made of high quality cold rolled silicon steel sheet, adopts the kinds of types like full-bias multi-step seam, no punched hole, winding iron core, etc., besides, both stainless steel stay plate and epoxy glass belt are for clamping it.
2.Coil High
quality enameled wire that is made of oxygen free copper or paper wrapped flat copper wire is used as conductor, the coils is provided kinds of types such as drum type, spiral type,improved spiral tvpe. continuous type and interleaved tvpe.
3.Oil tank
The oil tank is of barrel type or shield type, the heat-sinking element is provided with corrugated plate or plated radiator
The transformer has not been equipped with trolley, but there is a base that accords with nationa standard rail gauge welded at the bottom of box for your convenience.
4.Safety protection device
According to national standard and users' reauirements, the transformer mav be eguipped with following safety protection devices: pressure relief valve, gas relay, signal thermometer, oil purifier, oi conservator, oil samplina valve, etc.

Zhejiang Zhegui Electric Co.,Ltd

ZW32-12

Outdoor Medium Voltage VCB

Overview

ZW32-12 type outdoor H.V. vacuum circuit breaker is the outdoor distribution equipment with rated voltage 12KV, three phase AC 50Hz. It is used in substation and industrial and mining enterprises distribution system for protecting and controlling use. It is also used in rural power grid places with frequent operation for breaking and closing the load current and over load current and short circuit current of power system.

The out insulation of the vacuum interrupter adopt silicone rubber casing, with longer life, higher reliability, good weather resistance, convenient for transportation, good rating. The operating mechanism adopt miniaturization, high reliable spring operation mechanism, has the advantages of simple structure, mechanical life up to 10000 times.This circuit breaker and controller can form a complete set as recloser, realize remote control, telemetry, remote communication, remote adjustment four remote function.Product features: no combustion and explosion hazards, maintenance free, small size, light weight (less than 100kg), long service life (million), safety and reliability, simple operation, convenient maintenance and installation.

The use of environmental conditions

1.The environment temperature: upper limit +40℃, lower limit -30℃
2.Altitude ≤ 2000 meters
3.Wind pressure: no more than 700Pa (corresponding to the wind speed 34m/s)
4.Earthquake intensity: do not exceed 8 degree
5.Pollution grade: III class
6.Maximum daily temperature: less than 25℃.

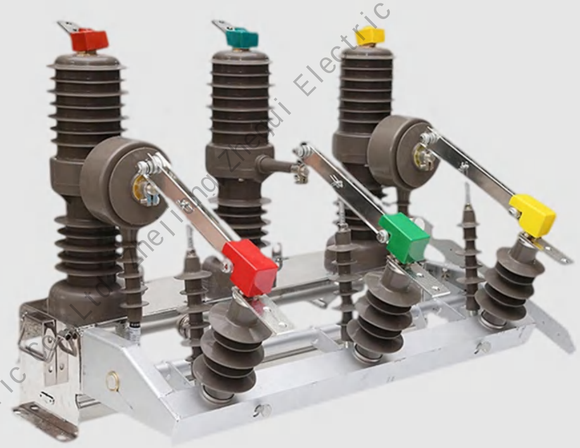

Model Description

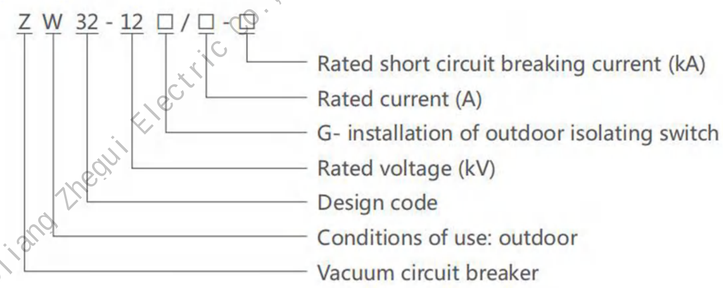

Main technical parameters

Item		Unit	Parameter
Voltage, current parameters			
Rated voltage		kV	12
Rated short time power frequency withstand voltage (1min)		kV	42
Rated lightning impulse withstand voltage (peak)		kV	75
Rated frequency		Hz	50/60
Rated current		A	630 / 1250
Rated short-circuit breaking current		kA	20
Rated short-time withstand current (RMS)		kA	20
Rated peak withstand current		kA	50
Rated short-circuit closing current		kA	50
Rated single/back-to-back capacitor bank breaking current		A	630/400
Rated short-circuit current duration		S	4
Rated short-circuit current breaking times		times	50
The main circuit resista nee		μΩ	≤80(140)
Rated operational voltage			≦220
Mechanical life		times	10000
The overcurrent regulating ☆		A	I~10
Quick-break current ☆		A	6~20
The delay time ☆		ms	40-850
Remote control distanee ☆		m	>30
Reclose time ☆		times	0~3
Rated operating sequenee ☆			O-0.3s-CO-180s-CO
CT※	Ratio	A	0/5
	Capacity	VA	15
The output voltage※		A	AC220
The output capacity※		W	600
The overcurrent regulating※		A	I~10
The delay time※		ms	40-850
Remote control distance ※		m	30

Zhejiang Zhegui Electric Co.,Ltd

ZW20-12F

Column Medium Voltage intelligent VCB

Overview

ZW20-12 outdoor AC HV vacuum boundary circuit breaker (hereinafter referred to as the boundary circuitbreaker) is one of our new products. Boundary circuit breaker is a multifunctional intelligent device with the function of vacuum breaker, vacuum load switch, recloser, sectionalizer four switches. The main configuration consists of vacuum breaker, CH-40 controller, external voltage transformer (Note: distribution automation line ring network available in bilateral PT) three parts. Products are widely used in 10kV, 13kV city, rural power grid space ring network for disconnecting switch, contact switch, automatic switch device which can implement the ring deployment line load. It can be used as boundary switch (commonly known as watchdog) in the branch line of power supply, used as reclosers and sectionalizers in feed overhead distribution network. Boundary circuit breaker with remotemanagement pattern, protection and control functions and communicationfunctions. Reliable detection in judgment, mA level zero sequence current and short circuit current between phases, realize the automatic removal of single-phase grounding fault and phase to phase short circuit fault.The main switch is vacuum arc and insulation adopts SF6, N2 mixed gas.

The case introducting of Japan, Germany, French gas sealing, explosion proof, insulation system technology, the overall excellent sealing performance. Inside is filled with SF6, N2 mixed gas which does not leak, not affected by the external environment. The spring operating mechanism with miniaturization and performance optimization design, action reliability is much higher than the traditional spring mechanism.



Model Description

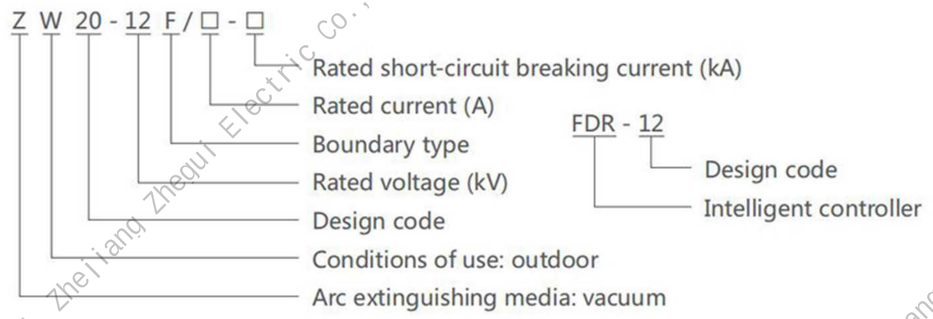

The use of environmental conditions

1.Altitude≤2000 meters
2.The environment temperature: -30℃~+55℃ outdoor; the highest annual average temperature 20 ℃, the highest daily average temperature 30 ℃;
3.Relative humidity: 95% (25℃)
4.Seismic capacity: horizontal ground acceleration 0.3g, vertical ground acceleration 0.15g, at the same time duration of three sine waves, a safety factor of 1.67
5.Earthquake intensity: 7 degrees
6.The maximum daily temperature difference: 25 ℃
7.The intensity of sunshine (wind speed 0.5m/s): 0.1W/cm²
8.The maximum wind speed: 34m/s
9.The maximum ice thickness: 10mm
10.Installation position: outdoor, the 10kV overhead line responsibility demarcation point
11.Grounding: neutral non grounding, arc suppression coil grounding and low resistance grounding

Zheiiang Zhegui Electric Co.,Ltd

ZW7

Outdoor Medium Voltage VCB

Overview

ZW7-40.5 type outdoor high voltage vacuum circuit breaker is the three-phase AC 50Hz outdoor high voltage electrical equipment; suit for control and protection of 20~40.5kV transmission and distribution system; can also be used for sectional circuit breaker and switching capacitor bank occasions; this product can be matched with piecewise controller, reclose device can realize the power system intelligent segmentation, reclose control. And can add the current transformer for measurement and protection. Circuit breaker equipped with spring orelectromagnetic actuator, reliable mechanical performance, frequent operation; no fire and explosion danger; circuit breaker conforms to the national standard GB1984-1989 "AC high voltage circuit breaker" and the International Electrotechnical Commission Standard IEC56, IEC62271-100 "high voltage AC circuit breaker" requirements.The main characteristics of circuit breaker: excellent breaking performance, use vacuum arc, high breaking capability, mechanical life of up to 10000 times, has the advantages of simple structure, free maintenance, no maintenance cycle long; good insulation performance, good anti contamination ability; can be installed current transformer according to customer requirements, the measurement accuracy up to 0.2 class, can realize the three-phase interactive protection.



Main technical parameters

Item	Unit	Parameter
Voltage, current parameters		
Rated voltage	kV	40.5
Rated short time power frequency withstand voltage (1min)	kV	95
Rated lightning impulse withstand voltage (peak)	kV	185
Rated current	A	1250, 1600, 2000
Rated short-circuit breaking current	kA	25, 31.5
Rated operating sequence		O-0.3s-CO-180s-CO
Rated short-circuit current breaking times	times	12
Rated short-circuit closing current (peak)	kA	63.80
Rated peak withstand current	kA	63.80
Rated short-time withstand current	kA	25, 31.5
Rated short-circuit current duration	S	4
Average opening velocity	ms	1.5±0.2
Average closing speed	ms	0.7±0.2
Contact closing bounce time	ms	<5
Three-phase close (open) synchronization error	ms	<2
Closing time	ms	<150
Opening time	ms	<60
Mechanical life	times	10000
Rated operational voltage and auxiliary circuits rated voltage	V	DC220, AC220
DC resistance of circle every phase (not including transformer)	pQ	<100
Dynamic, static contact allowed to wear thickness	mm	3
Weight	kg	800

The use of environmental conditions

1.Ambient temperature: upper limit +40℃, lower limit -30℃;
2.Days difference does not exceed 32K;
3.Altitude: 1000m and the following areas;
4.Wind pressure: not more than 700Pa (corresponding to the wind speed 34m/s);
5.Air pollution level: IV class
6.Earthquake intensity: do not exceed 8 degree;
7.Ice thickness: no more than 10mm.

Zhejiang Zhegui Electric Co.,Ltd

ZW8

Outdoor Medium Voltage VCB

Overview

ZW8-12 type outdoor high voltage vacuum circuit breaker is mainly used for AC 50Hz, voltage 10~12KV three phase power system, used for breaking and closing the load current. It has overload and short circuit protection function. It can equipped with surge current time delay protector and the lightning arrester or isolating switch namely breaker and isolating switch combination etc. according to user needs.

The use of environmental conditions

1.Ambient temperature: upper limit +40℃, lower limit -30℃;
2.Altitude ≤ 2000 meters
3.Pressure: not more than 700Pa (corresponding to the wind speed 34m/s);
4.Earthquake intensity: do not exceed 8 degree;
5.Pollution grade: III class;
6.Maximum daily temperature variety less than 25℃.



Model Description

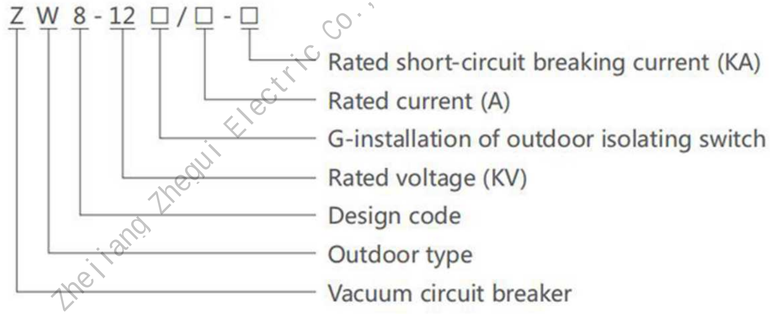

Main technical parameters

Item		Unit	Parameter
Voltage, current parameters			
Rated voltage		kV	12
Rated short time power frequency withstand voltage (Imin)		kV	42
Rated lightning impulse withstand voltage (peak)		kV	75
Rated frequency		Hz	50/60
Rated current		A	630 / 1250
Rated short-circuit breaking current		kA	20
Rated short-time withstand current (RMS)		kA	20
Rated peak withstand current		kA	50
Rated short-circuit closing current		kA	50
Rated single / back-to-back capacitor bank breaking current		A	630/400
Rated short-circuit current duration		S	4
Rated short-circuit current breaking times		times	50
The main galva nic loop resista nee		μΩ	≤120(200 isolation)
Rated operational voltage			≌220
Mechanical life		times	10000
The overcurrent regulating ☆		A	I~10
Quick-break current ☆		A	6~20
The delay time ☆		ms	40-850
Remote control distanee ☆		m	>30
Reclose time ☆		times	0~3
Rated operating sequenee ☆			O-0.3s-CO-180s-CO
CT ※	Ratio	A	0/5
	Capacity	VA	15
The output voltage ※		A	AC220
The output capacity ※		W	600
The overcurrent regulating※		A	1-10
The delay time※		ms	40-850
Remote control distanee ※		m	30

Zhejiang Zhegui Electric Co.,Ltd

LW3

Outdoor Medium Voltage VCB

Overview

LW3-12, LW3-12g I II III series outdoor high-voltage SF6 circuit breakers are new outdoor high-voltage electrical appliances which use SF6 gas as arc extinguishing and insulating medium. The operating mechanismis divided into (type I) manual energy storage spring operating mechanism （There are three kinds of operating mechanism, which are motor energy storage spring operating mechanism and DC electromagnetic operating mechanism. Compared with other 10kV outdoor circuit breakers, this product has the advantages of simple structure, excellent arc extinguishing and insulation performance, small operation power, high rated parameters, long electrical life and no maintenance cycle. The use of this product can not only reduce the floor area. It can not only reduce the project cost and eliminate the fire risk, but also greatly improve the reliability of the power system.

Model Description

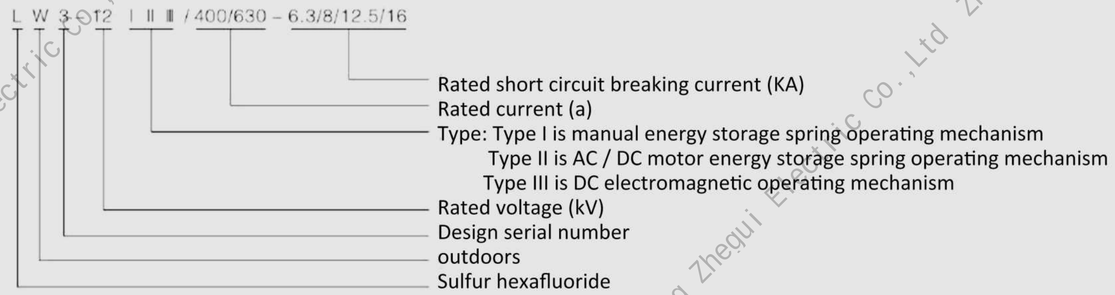



Technical Data

Project		Unit	Date
Rated voltage		kV	12
Maximum working voltage		KV	12
Rated insulation level (when SF6 gas filled by short circuit is 0.25MPa, 20 ℃)	Lightning impulse withstand voltage (peak value)	kV	75
	1 Min frequency withstand voltage		42
	Rain withstand voltage test		34
	Reverse impulse withstand voltage		85
Insulation level at zero gauge voltage	Power frequency withstand voltage for one minute		30
	Reverse voltage withstand for one minute		30
	Maximum phase voltage 5 minutes		12
Rated current		A	400,630
Rated short circuit breaking current		kA	6.3 8 12.5
Breaking current at zero gauge voltage		A	400 630
Rated operation sequence	Type I		O— 180 s-CO-180s—CO
	Type II III		O-0-3s：-CO-180s-CO
Rated closing current (peak value)		kA	16 20 31.5
Rated steady current (peak value)			16 20 31.5
Rated thermal stability current			6.3 3 12.5
Rated thermal stability time		S	4

Zhejiang Zhegui Electric Co.,Ltd

LW8

Outdoor SF6 Medium Voltage VCB

Overview

The product has excellent breaking performance. It adopts compressed air arc chamber with long electric life.It can continuously break 40ka short circuit current for 20 times under rated voltage without maintenance or replacement of sulfur hexachloride gas. It has high mechanical reliability and mechanical life of more than 6000 times. It can be operated frequently; Each set can be equipped with 12 current transformers for users to choose.The product adopts a new type of MKZMSF6 pointer densimeter, and the reading of the pressure gauge is not affected by the temperature change, so it is easy to use.

LW □ - 40.5 horizontal SF6 circuit breaker can be numbered as LW8 (A) - 40.5, LW16-40.5, LW34-40.5; The middle type can be numbered as LWB (A) - 40.5T.LW16-40.5T. This type of circuit breaker is a three-phase AC 50 Hz outdoor high-voltage electrical equipment, which is suitable for the control and protection of 40.5 kV power distribution system. It can also be used for connecting circuit breaker and switching capacitor bank. This product is equipped with CT14 spring machine. The circuit breaker meets the requirements of national standard GB1984-1989 "AC high voltage circuit breaker" and IEC 56, IEC 62271-100 "high voltage AC circuit breaker".



Main technical parameters

Project		Unit	Parameter		
Rated voltage		kV	24	36	40.5
Rated insulation level	Lightning impulse withstand voltage (full wave peak)	kV	150	170	210*/215（fracture）185
	Power frequency withstand voltage (1 minute)	kV	65	75	95
Rated current		A	1250/1600/2000/2500		
Mechanical life		time	10000		
SF6 gas rated pressure (25 gauge pressure)		MPa	0.45		
Blocking pressure (time gauge pressure)		Mpa	0.40		
Maximum 4 ℃ ambient temperature		℃	-30		
Rated short circuit breaking current		kA	20/25/31.5/40		
Rated short circuit making current (peak value)		kA	50/63/80/100		
Rated short time withstand current (thermal stability current)		kA	20/25/31.5/40		
Rated peak withstand current (dynamic stability current)		kA	50/63/80/100		
Rated out of step breaking current		kA	50/63/80/100		
Rated short circuit duration		s	4		
Closing time (at rated operating voltage)		ms	≤80	≤80	≤100
Opening time (under rated operating voltage)		ms	≤65	≤65	≤70
Rated operating sequence			0—0.3s—CO—180s—CO		
Rated switching current of single capacitor bank		A	400		
Annual air leakage rate		%/year	≤1		
Water content of SF6 gas (at 20 ℃)		PPm(V/V)	≤150		
Rated operating voltage of ct14 spring operating mechanism		V	DC:110、220 AC； 110、 220、380		
Closing coil and breaking coil voltage		V	DC:110、220 AC； 110、 220、380		
Voltage of energy storage motor		V	AC:220 DC:220		
Closing speed		m/s	3.2 ± 0.2	3.2 ± 0.2	3.2 ± 0.2
Opening speed		m/s	3.4±0.2	3.4±0.2	3.4±0.2
Weight of sulfur hexafluoride gas		kg	7-8		
Weight of circuit breaker (including operating mechanism)		kg	800/900/1400		

Zheiiang Zhegui Electric Co.,Ltd Zheiiang Zhegui Electric Co.,Ltd

VCP-12

Intdoor Medium Voltage VCB

Overview

VCP-12 type indoor high voltage vacuum circuit breaker is the indoor switch device for three-phase AC 50Hz, rated voltage 12kA power system, can be used for electrical equipment control and protection in power plant, substation and industrial and mining enterprises, and is suitable for frequent operation place, can be installed in the KYN28-12 type and other armored cabinet, can also be installed on the fixed cabinet or gas insulated cabinet.

Design feature

VCP-12kV indoor medium voltage sealed vacuum circuit breaker(12kV, …4000A, …50kA)
VCP indoor medium voltage sealed vacuum circuit breaker with maintenance free sealed vacuum pole, can equipped with modular spring assembling actuator and permanent magnetic actuator; has the features of reliable performance, long mechanical life, maintenance free, small mechanical movement, has the advantages of simple structure, good process performance, but also can be applied to all kinds of bad working environment.VCP circuit breaker pole adapts the solid insulation sealing technology, seal the vacuum interrupter and primary main galvanic circle and other parts into strong insulation, high mechanical strength pole with epoxy resin, avoid the influence of adverse operating environment on the primary circuit external insulation, realizes completely maintenance free.VCP circuit breaker adapt ultra low resistance type vacuum interrupter, meet the VCP circuit breaker requirements on the temperature rise at big current operation situation and reduces the power losses.VCP circuit breaker adapt optimization and modular spring operating mechanism, simple structure, stable performance, convenient maintenance; modular production process is good, easy standardization production, short delivery cycle.



Model Description

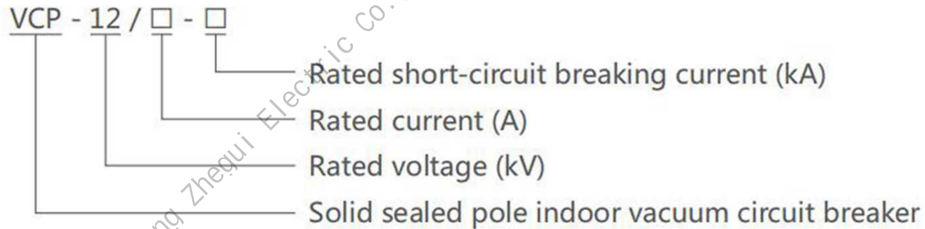

Main technical parameters

Item	Unit	Parameter			
Parameters of voltage, current,life					
Rated voltage	kV	12			
Rated short time power frequency withstand voltage (Imin)	kV	42			
Rated lightning impulse withstand voltage (peak)	KV	75			
Rated frequency	Hz	50			
Rated current	A	630 1250		1250 1600 2000 2500	1250 1600 2000 2500 3150 40000
Rated short-circuit breaking current	kA	20	25	31.5	40
Rated short-time withstand current (RMS)	kA	20	25	31.5	40
Rated peak withstand current	kA	50	63	80	100
Rated short-circuit closing current	kA	50	63	80	100
Rated single / back-to-back capacitor bank breaking current	A	630/400			
Rated short-circuit current du rati on	s	4			
Rated short-circuit current breaking times	times	50		30	

Zhejiang Zhegui Electric Co.,Ltd

ZN62A-12

Pole Type Indoor Medium Voltage VCB

Overview

ZN63A-12 (VS1) type indoor high voltage vacuum circuit breaker (hereinafter referred to as circuit breaker) is usedfor indoor high voltage switch equipment of power system, as a protection and control unit of network equipment, industrial and mining enterprises power equipment, suitable for the place of frequent operation at rated working current or many times of breaking short-circuit current place. The circuit breaker uses the integrated design of actuator and the circuit breaker body, not only can be used as a fixed install unit, also can be equipped with special chassis, hand car unit.

The use of environmental conditions

1.The environment temperature: upper limit+40℃, lower limit -15℃ (allow storage at -30℃);
2.Altitude: no more than 2000m;
3.Relative humidity: daily average value is not greater than 95%, monthly average is not greater than 90%;
4.Saturated steam pressure: daily no larger than 2.2×10-3Mpa, monthly average is not greater than 1.8×10-3
Mpa;
5.Earthquake intensity does not exceed 8 degrees;
6.No fire, explosion, pollution, chemical corrosion and severe vibration place.



Model Description

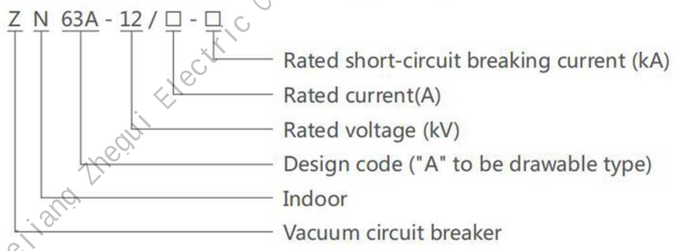

Main technical parameters

Item	Unit	Parameter				
Parameters of voltage, current, life						
Rated voltage	kV	12				
Rated short time power frequency withstand voltage (Imin)	kV	42				
Rated lightning impulse withstand voltage (peak)	kV	75				
Rated freque ncy	Hz	50				
Rated current	A	630 1250		1250 1600 2000 2500	1250 1600 2000 2500 3150 4000	4000 5000
Rated short-circuit breaking current	kA	20	25	31.5	40	50
Rated short-time withstand current (RMS)	kA	20	25	31.5	40	50
Rated peak withstand current	kA	50	63	80	100	125
Rated short-circuit closing current	kA	50	63	80	100	125
Rated single / back-to-back capacitor bank breaking current	A	630/400				
Rated short-circuit curre nt du rati on	S	4				
Rated short-circuit current breaking times	times	50			30	
Rated operating sequenee		O-t-CO-180s-CO rated short-circuit breaking current less than 31.5kA, t=0.3s rated short-circuit breaking current 40kAr t=180s ~				

Zhejiang Zhegui Electric Co.,Ltd

VS1-12C

Intdoor Medium Voltage VCB

Overview

ZN63C-12 (VS1-12C) type indoor side installed high voltage vacuum circuit breaker is indoor high voltage switchgear, is suitable for three-phase power system with the rated voltage 12kV, frequency 50Hz, used as a protective and control equipment, due to the special advantages of vacuum circuit breaker, particularly applicable to frequent operation under the rated current, or multiple breaking short circuit current location. ZN63C-12 (VS1-12C) type indoor side installed high voltage vacuum circuit breaker adapts fixed installation, mainly used for fixed type switch cabinet, the circuit breaker can be used separately, but also can be used for ring network power supply, box type substation or various non-standard power supply system.

Environmental Requirements

1.The environment temperature: upper limit +40℃, lower limit -1
(Allow storage at -30℃)
2.Altitude: no more than 2000m;
3.Relative humidity: daily average value is not greater than 95%
monthly average is not greater than 90%;
4.Saturated steam pressure: daily average value is not high
er than 2.2×10-3 Mpa,
5.monthly average is not higher than 1.8×10-3 Mpa;
6.Earthquake intensity does not exceed 8 degrees;
7.No fire, explosion, pollution, chemical
corrosion and severe vibration place.



Main technical parameters

Item	Unit	Parameter		
Parameters of voltage, current, life				
Rated voltage	kV	12		
Rated short time power frequency withstand voltage (lmin)	kV	42		
Rated lightning impulse withstand voltage (peak)	kV	75		
Rated frequency	Hz	50		
Rated current	A	630	630, 1250	1250, 1600
Rated short-circuit breaking current	kA	20	25	31.5
Rated short-time withstand current(RMS)	kA	20	25	31.5
Rated short-circuit closing current	kA	50	63	80
Rated short-circuit current duration	S	4		
Rated short-circuit current breaking times	times	50		
Rated operating sequenee		O-0.3s-CO-180s-CO		
Closing time	ms	≤570		
Opening time	ms	≤550		
Rated energy storage operating voltage	V	≦220/110		
Energy storage time	S	≤510		
Mechanical life	times	≥10000		

Outline and mounting dimensions

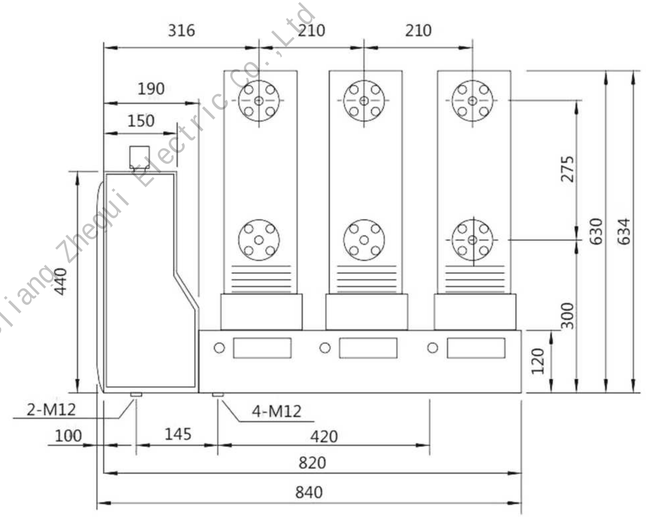

Zhejiang Zhegui Electric Co.,Ltd

GN19

Indoor Medium Voltage Disconnector

Overview

GN19-12(C) indoor HV disconnect switch applies to power system of rated voltagebelow 12kV,AC 50/60Hz. It is equipped with CS6-1 manual-operating mechanismand is used to break and make circuit under no-load. There are additional pollution type, high-altitude type and power indicating type. It is made as perIEC62271-102.

The use of environmental conditions

1. Altitude: 1000m;
2. Ambient temperature: -25 ~+40 ;
3. Relative humidity: daily average 95 , monthly average 90 ;
4. Earthquake intensity: 8 degree;
5. Applicable occasions should free from inflammables, explosives, corrosives and severe vibration.

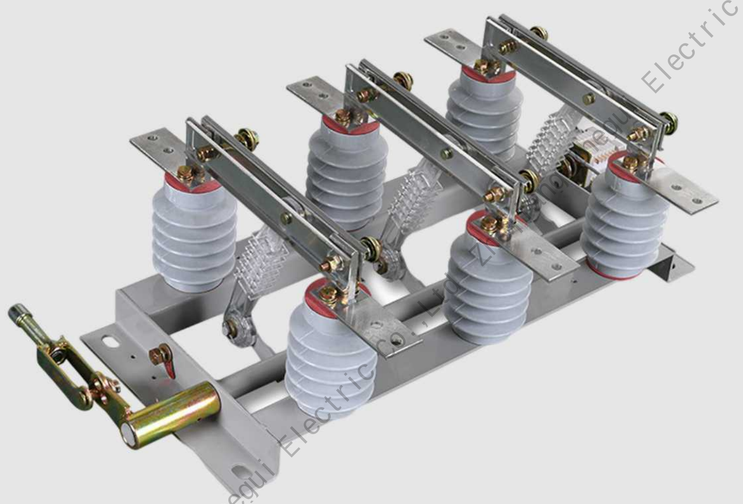

Model Description

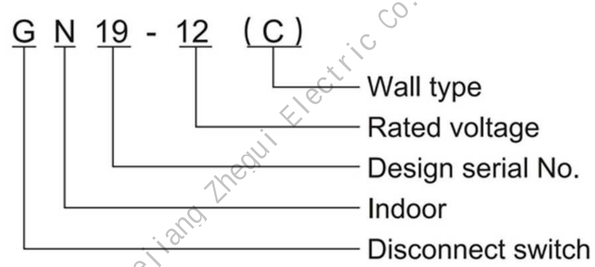

Main technical parameters

Model	Rated voltage (kV)	Rated current (A)	Rated short-time withstand current(kA/4s)	Rated peak withstand current(kA)
GN 19-12/400-12.5	12	400	12.5	31.5
GN 19-12/630-20	12	630	20	50
GN19-12/1000-31.5	12	1000	31.5	80
GN19-12/1250-31.5	12	1250	31.5	80
GN19-12C/400-12.5	12	400	12.5	31.5
GN19-12C/630-20	12	630	20	50
GN19-12C/1000-31.5	12	1000	31.5	80
GN19-1C2/1250-31.5	12	1250	31.5	80

Zheiiang Zhegui Electric Co.,Ltd

GN30

Indoor Medium Voltage Disconnector

Overview

GN30-12(D) disconnect switch is an indoor electric apparatus of rated voltage12kV, three-phase AC 50/60Hz. It is used to make break and transfer currentfor HV electric apparatus under situations with voltage and no-load.The switchapplies rotary moving contact which is mounted on the switchgear easily. Itadopts wallthrough installation as well.It is made as per IEC62271-102

The use of environmental conditions

1. Altitude: 1000m;
2. Ambient temperature: -25 ~+40 ;
3. Relative humidity: daily average 95 , monthly average 90 ;
4. Earthquake intensity: 8 degree;
5. Applicable occasions should free from inflammables, explosives, corrosives and severe vibration..

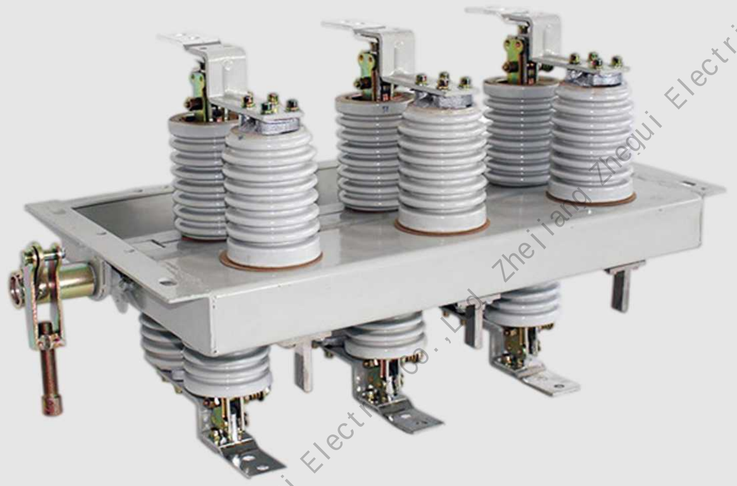

Product feature

1. Scientific design and innovative structure.
2. Contacting points distribute on two planes, small operating moment, and release pressure to small and easy adjustment.
3. Improved driving and conducting part.
4. Column moving contact that can decrease operating strength and ensure reliability of circuit conduction.

Main technical parameters

Model	Rated voltage (kV)	Rated current (A)	Rated short-time withstand current(kA/4s)	Rated peak withstand current(kA)
GN 19-12/400-12.5	12	400	12.5	31.5
GN 19-12/630-20	12	630	20	50
GN19-12/1000-31.5	12	1000	31.5	80
GN19-12/1250-31.5	12	1250	31.5	80
GN19-12C/400-12.5	12	400	12.5	31.5
GN19-12C/630-20	12	630	20	50
GN19-12C/1000-31.5	12	1000	31.5	80
GN19-1C2/1250-31.5	12	1250	31.5	80

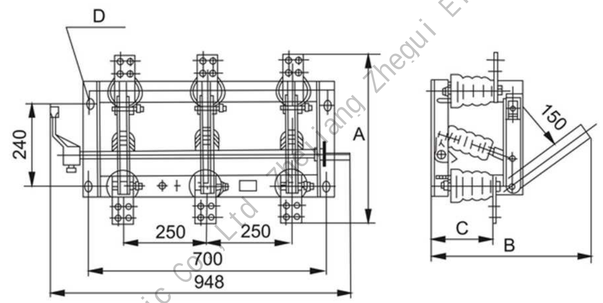

Diagram 1 GN19-12

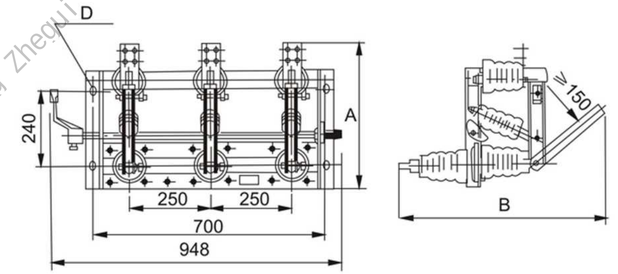

Diagram 2 GN19-12C

Zhejiang Zhegui Electric Co.,Ltd

GW4

Outdoor Medium Voltage Disconnector

Overview

GW4 type outdoor high-voltage isolating switch is used for three-phase AC 50Hz outdoor high voltage electrical equipment, used for the line to switching under pressed voltage no load condition, and electrical isolation the maintenanced high voltage bus, circuit breakers and other electrical equipment and charged high voltage line, can also be used for the opening and closing small capacitance or inductance current. When the knife in the normal break position, can provide a insulation distance consistent with safety requirements. Widely used in 35~110kV substation.

The use of environmental conditions

1.Ambient temperature: upper limit +40℃, lower limit -30℃
2.Altitude: no more than 3000m;
3.Wind speed: no more than 35m/s;
4.Earthquake intensity: do not exceed 8 degree;
5.Pollution level: no more than III class
6.No severe vibration, no corrosive gas, no fire, no explosion danger place.



Model Description

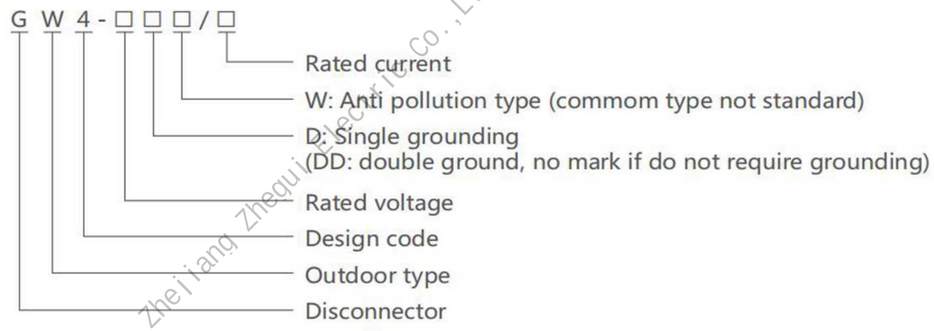

Main technical parameters

Item		Parameters				
		GW4- 40.5	GW4- 72.5	GW4- 126	GW4-126G	GW4- 145
Rated voltage		40.5	72.5	126	126	145
Rated current		630 1250 2000 2500	630 1250 2000 2500 4000	630 1250 2000 2500	630 1250	1250 2000 2500
Rated short-time withstand current (RMS)		20 31.5 40(46)	20 31.5 40(46)	20 31.5 40(46)	20 31.5	20 31.5 40(46)
Rated peak withstand current (peak)		50 80 100(104)	50 80 100(104)	50 80 100(104)	50 80	50 80 100(104)
Rated short-time withstand voltage (effective value)	To the ground Fracture	80	140	185(230)	185	375
	Fracture	110	160	210(265)	210	315
Rated lightning impulse withstand voltage (peak)	To the ground	185	325	450(550)	450	650
	Fracture	215	375	520(630)	550	750
Wiring terminal rated the horizontal tension		490(735)	735	735	735	960
Weight of single pole		80	200	240	300	300

Zhejiang Zhegui Electric Co.,Ltd

GW9

Outdoor Medium Voltage Disconnector

Overview

The"GW9-10G"type of outdoor high voltage isolator switch is the high voltage switch equipment of single phase AC50Hz.The product is suitable ofr power system with rated voltage 10KV to make or break power supply under circumstances of with voltage and nomload. The isolator is adopts isolated rod to operate

The use of environmental conditions

1.The altitude does not exceed 1000m.
2.The ambient air temperature: Maximum+40℃:Minimum: General Area-30℃, Paramos-40℃.
3.The wind pressure does not exceed 700Pa.
4.The earthquake intensity does not exceed 8 degrees.
5.The working situation without frequent violent vibration.
6.The installation site of ordinary type isolator should be kept away from gas, smoke chemical deposition, salt-spray-fog, dust and other and corrosive maters that affect seriously insulation and conuction capability of the isolator.
7.Pollution-proof type isolator is applies to severe filthy conduction area, however,
8.It shouldn't be any explosive matters and matters causing fire.



Model Description

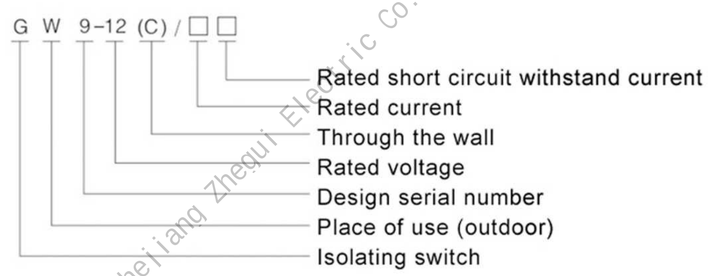

Main technical parameters

Type	Rated voltage (kV)	Rated current (A)	4S Heat steady e.c.	Motion steady e.c.	Impulse withstand voltage		Power-frequency withstand voltage	
					To earth	Across the isolating distance (kV)	To earth	Across the isolating distance (kV)
GW9(W)	12	400	12500	31500	75	85	38	42
	12	630	12500	31500	75	85	38	42
HGW9(W)	12	400	12500	31500	75	85	38	42
	12	630	12500	31500	75	85	38	42
JDW2	0.5	800	1250	3150	4	5	2	3
	0.5	1000	1250	3150	4	5	2	3

Zhejiang Zhegui Electric Co.,Ltd

FL(R)N36-12D

Indoor SF6 Load Break Switch

Overview

FL(R) N36-12D indoor high voltage SF6 load switch is indoor switch equipment with rated voltage of 12kV. SF6 gas is used as arc extinguishing and insulating medium, including three working positions of closing, opening and grounding. It has the characteristics of small volume, easy installation and strong applicability to the environment. FL(R) N36-12D indoor high voltage SF load switch is combined with other electrical components to realize control and protection functions. It can be used for the control and protection of electrical equipment in industrial and mining enterprises, civil power supply and secondary substation. Among them, the load switchfuse combination device matches the protection characteristics of the transformer, which is especially suitable for the ring network power supply unit. FLN36-12D / 630-20 indoor high voltage SF6 load switch (hereinafter referred to as load switch) and FL(R)N36-12D/100-50 combined apparatus (hereinafter referred to as combined apparatus) meet the national standard gb3804-1990 "3 ~ 63kV AC high voltage load switch" (EQVLEC60265-1: 1997) and GBL69261997 "AC high voltage load switch fuse combination" GBL69261997.

The use of environmental conditions

Ambient air humidity

Upper limit + 40 ℃

Lower limit - 15 ℃

Ambient humidity

Daily average relative humidity not more than 95%

Monthly average relative humidity not more than 90%

Altitude

The maximum altitude of the equipment installation site is 1000m

Earthquake

The intensity of the earthquake did not exceed 8 degrees

The surrounding air shall not be obviously polluted by corrosive combustible gas and water vapor, and there shall be no severe vibration



Model Description

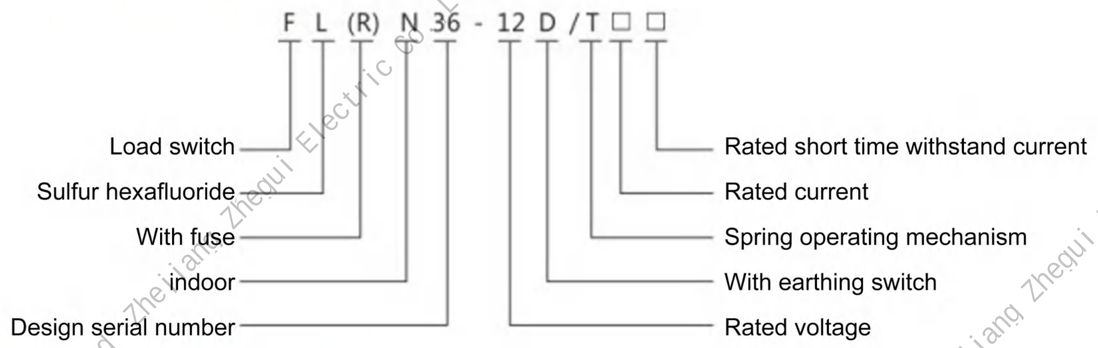

Main technical parameters

Number	Name		unit	Parameter	
				FLN36-120 / T630-20 load switch	FLN36-12D / T100-50 load switch fuse combination
1	Rated voltage		KA	12	
2	Rated frequency		HZ	50	
3	Rated current		A	630	100
4	Rated insulation level	1min power frequency withstand voltage	KA	To ground, between two phases 42, port 48	
		Lightning impulse withstand voltage (peak value)		To ground, between two phases 42, port 48	
		Rated withstand voltage at zero gauge pressure		12	
5	Rated thermal stability current (3S)		KA	20	
6	Rated dynamic stability current		KA	50	
7	Rated short circuit making current		A		125
8	Rated closed loop breaking current		A	630	
9	Rated Active load breaking current		A	630	
10	Rated cable charging breaking current		A	10	
11	Rated short circuit breaking current		KA		50
12	Rated transfer current		A		1700
13	Fuse type				SKLDJ-12KV/100A
14	Energy output from impact		J		1±0.5
	Rated thermal stability current of grounding switch (3S)		KA	20	
15	Rated dynamic stable current (peak value) 2S of grounding switch		KA	50	
16	Grounding switch rated dynamic stable current		KA	50	
17	Mechanical life	Load switch	time	3000	
		Grounding switch	time	2000	
18	Air insulation distance between charged bodies and ground		mm	>125	
19	SF6 gas pressure (20 ° C gauge pressure)		Mpa	0.05	
20	Annual leak rate			<1%	
21	Opening and closing interval		ms	<3	
22	Loop resistance		μΩ	<65	
23	Maximum distance of manual operation		N.m	85	
24	Rated operating voltage		V	AC110 DC48 AC220	

Zhejiang Zhegui Electric Co.,Ltd

FL(R)N36-12D

Indoor Vacuum Load Break Switch

Overview

FZ (R) N21-12D indoor high-voltage vacuum load switch and composite apparatus, used for circuit AC 50Hz, rated voltage 12kV, plays power distribution, control and protection of electrical equipment function. It can replace the expensive circuit breaker in a certain range, thus saving the power grid investment costs. The combination of electrical appliances can be widely used in the ring network power supply system in urban and rural areas. Under normal operation condition, it can close, bearing and breaking rated current, also can break the specified short-circuit current under abnormal conditions, especially suitable for the control and distribution and protection of transformer.

The use of environmental conditions

1.Altitude: no more than 1000m;
2.The environment temperature: upper limit +40℃, lower limit -30℃;
3.Relative humidity: daily average value is not greater than 95%, monthly average is not greater than 90%;
4.Saturated steam pressure: daily average value is not higher than 2.2×10-3 Mpa, monthly average is not higher
than 1.8×10-3 Mpa;
5.No severe vibration, no corrosive gas, no fire, no explosion danger place.

Model Description

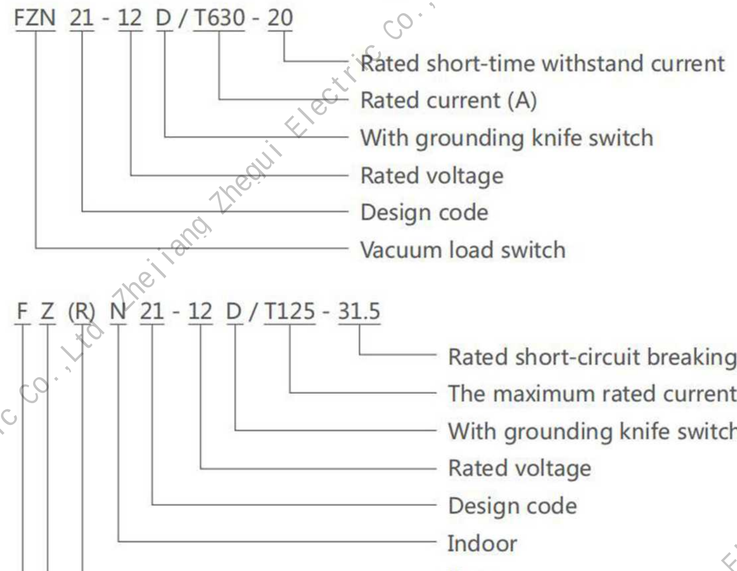



FZN21-12D/T630-20
FZRN21-12D/T125-31.5

Main technical parameters

Item	Unit	Parameter
Technical parameter of combinations		
Rated voltage	kV	12
Rated frequency	Hz	50
The maximum rated current of the fuse	A	125
Transfer current	A	1550
The fuse triggered switch segment time	ms	40±5
Rated short-circuit breaking current	kA	31.5
Rated short-circuit closing current (prospective peak value)	kA	80
Imin power frequency withstand voltage (vacuum fracture, interphase, phase to earth / isolation fracture)	kV	42/49
The lightning impulse withstand voltage (vacuum fracture, interphase, phase to earth / isolation fracture)	kV	75/85
Fuse impinger type		Medium-sized
Technical parameters of vacuum load switch of combined electrical appliance.		
Rated voltage	kV	12
Rated frequency	Hz	50
Rated current	A	630

Zheiiang Zhegui Electric Co.,Ltd

FL(R)N36-12D

Indoor Vacuum Load Break Switch

Overview

FZN25, FZRN25 type vacuum load switch and composite apparatus, suitable for three-phase AC 50Hz ring network or terminal power supply and industrial electrical equipment, for load control and short circuit protection use, load switch open and close the closed loop current, no-load transformer and cable charging current, composite apparatus can break any current till rated short circuit current.Adopt the straight move or isolating fracture and vacuum interrupter linkage. With function of manual and electric operation.FZN25, FZRN25 special transmission structure design, arc extinguish chamber only withstand voltage in the moment of closing and breaking, small size, low price.FZN25, FZRN25 can realize isolation fracture and arc extinguish chamber fracture disposable operating.FZN25, FZRN25 has a grounding switch mutual linkage grounding valve between the static contact and movable conductive cylinder, ensures safety and convenient maintenance.

The use of environmental conditions

1.Ambient air temperature: upper limit +40℃, lower limit -25℃ (allow storage at -30℃), 24h average value is not higher than +35℃;
2.Altitude: no more than 1000m;
3.Relative humidity: daily average value is not greater than 95%, monthly average is not greater than 90%;
4.Earthquake intensity: do not exceed 8 degree;
5.The surrounding air is not corrosive and flammable gas, steam and other significant pollution;
6.No regular violent vibration;
7.Contamination grade: II class;



Model Description

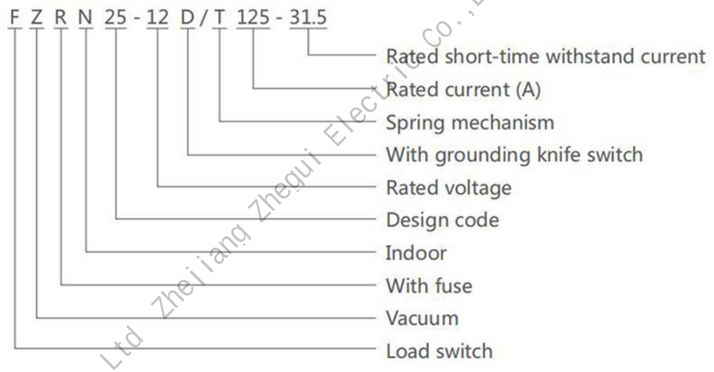

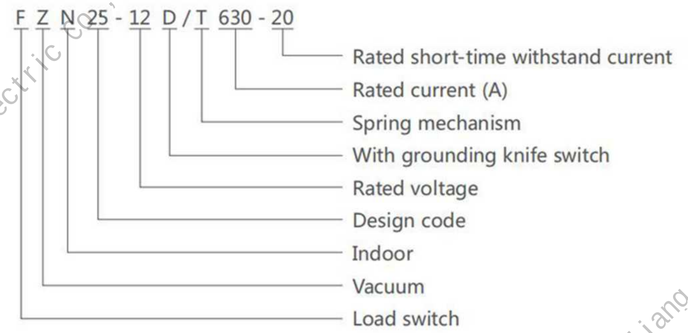

Main technical parameters

Item	Unit	FZN25-12D/ T630-20	FZRN25-12D/ T125-20
Voltage, current parameters			
Rated voltage	kV		12
Rated frequency	Hz		50
Rated current	A	630	125
Rated short time power frequency withstand voltage (1min)	kV	Interrupter fracture 30; phase to earth 42; isolation fracture 48	
Rated lightning impulse withstand voltage (peak)	kV	Phase to earth 75; isolation fracture 85	
Rated peak withstand current	kA	50	-
4s rated short-time withstand current	kA	20	-
Rated active load breaking current	A	630	-
Rated loop breaking current	A	630	-
Rated cable charging breaking current	A	10	-
Interrupting no load transformer capacity	kVA	1250	-
Rated short-circuit breaking current	kA	-	31.5
Rated transfer current, rated AC current	A	-	2000
Fuse type			SDLAJ-12 SFLAJ-12
The impactor energy output	J		2-5 (medium)

Zhejiang Zhegui Electric Co.,Ltd

JN15

Indoor Medium Earthing Switch

Overview

JN15-12/31.5 series indoor earthing switch is a new design and improved product of our company according to the ES1 type, suitable with electric power system with 3-12KV, Three-phase, AC 50(60)Hz, support with various kinds of HV switchgear and as earthing protection. It is manufactured comply with GB1985-2004 and IEC129 standard.

The use of environmental conditions

1.Ambient temperature:-10~+40℃
2.Altitude: ≤1000m (sensor height:140mm)
3.Relative humidity: Day average relative humidity ≤95%
4.Month average relative humidity ≤90%
5.Earthquake intensity: ≤8degree
6.Dirtiness degree: II

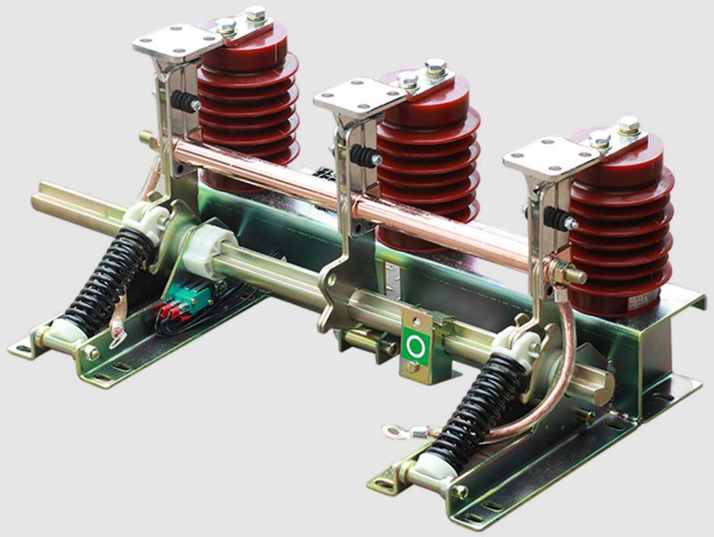

Model Description

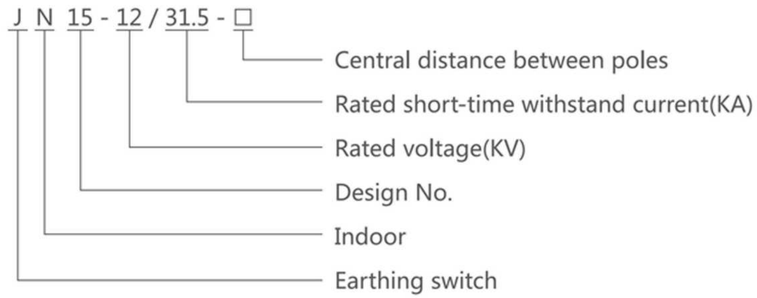

Main technical parameters

Item		Units	Data
Rated voltage		kV	12
Rated short time withstand current		kA	31.5
Rated short circuit withstand time		s	4
Rated short circuit making current		kA	80
Rated peak withstand current		kA	80
Rated insulation level	1min power frequency withstand voltage	KV	42
	Lightning Impulse withstand voltage	KV	75
Mechanism life		time	2000

