

Our goal is the sea of stars!

ZHEJIANG ZHEGUI ELECTRIC CO,. LTD.

Address: No.316 Weishiyi Road , Yueqing City,
Zhejiang Province, China
ProvinceTel: 0577-62657695/626577696
Email address:service@giantele.com
Website: www.giant-electric.com

Giantele®

GTM1

Moulded Case Circuit Breaker



www.giant-electric.com



GTM1-100M/4P



GTM1-250M/4P



GTM1-400M/4P



GTM1-630M/4P



GTM1-800M/4P

○ Application

GTM1 series moulded case circuit breaker is one of products developed and manufactured by adopting international advanced technology. It is supplied with rated insulating voltage 500 and 800V and used for the circuit of AC 50/60Hz, rated operating voltage AC 400V (or below), rated operating current up to 1600A for infrequently changing over and starting of the motors. The products conforms to IEC60947-2 standard.

○ Main Technical Specification

Type	Rated current (A)	Pole	Rate dinsulating voltage(V)	Rated operating voltage(V)	Arcingover distance(mm)	Ultimate short circuit breaking capacity(kA)	Service short circuit breaking capacity(kA)	Operation performance		Utilization category
								Load	Unload	
GTM1-63L	(6),10,16,20, 25,32,40,50,63	3，4	500V	400V	0	25	18	1500	8500	A
GTM1-63M					0	50	35			
GTM1-125L	(10),16,20,25, 32,40,50,63, 80,100,125		800V		0(≤50)	35	22			
GTM1-125M					0(≤50)	50	35			
GTM1-250L	100,125,160, 180,200,225				≤50	35	22	1000	7000	
GTM1-250M					≤50	50	35			
GTSM1-400L	225,250,315, 350,400				≤50	50	35	1000	4000	
GTM1-400M					≤100	65	42			
GTM1-630L	400 500 600				≤100	50	35			
GTM1-630M					≤100	65	42			
GTM1-800M	630,700,800				≤100	75	50			
M1-1250M	10,001,250				≤100	100	65			
M1-1600M	1600				≤100	150	80			

Note: 6A without thermal protection
The N-pole of four-poles breaker is sited at the right side of the product has four types:
Type A: Without current trip-release on N pole which making all the time, not closing and opening with the other three poles.
Type B: Without current trip-release on N pole which closing and opening with the other poles.
Type C: With current trip-release which closing and opening with the other three poles.
Type D: With current trip-release which making all the time not closing and opening with the other three poles.

○ Protection Characteristic

The thermodynamic release of a circuit breaker provides the feature of inverse time-delay, while the magnetic release is the instantaneous operation as shown on table 2(distribution circuit breaker) and table 3 (motor protection circuit breaker).

Rated current of release (A)	Thermodynamic release(ambient temperature land +40°C marine +45°C)		Operating current of magnetic release (A)
	1.05In(cold state) Inoperative time(h)	1.30In(heat state) Operative time(h)	
10 ≤ In ≤ 63	≥ 1	<1	10In ± 20%
63<In ≤ 100	>2	<2	
100<In ≤ 800	≥ 2	<2	5In ± 20% 10In ± 20%

Table 3

Rated current of release (A)	Thermodynamic release(ambient temperature land +40°C marine +45°C)				Operating current of magnetic release (A)
	1.0In(cold state) non-trip time(h)	1.20In(heat state) trip time (h)	1.50In(heat state) trip time (m)	7.2In(cold state) trip time(s)	
10≤ In≤250	≥2	<2	≤4	4<t≤10	12In±20%
250<In≤ 630			≤8	6<t≤20	

○ Accessories of Circuit Breaker

The external accessories of the breaker

Electromagnetic operation device and Motor-driven operation device1
Wiring diagram of type CDM electromagnetic operation device(fitting AM1-63,100,250) see the following drawing (wiring diagram of the external accessories of the breaker in the dotted fram)



Back panel connection



Plug-in connection



Electromagnetic operation device



Motor-driven operation device

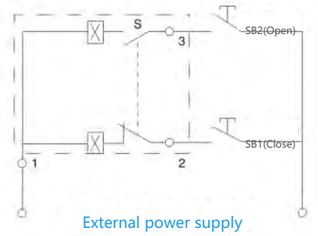

External power supply

Code description: SB1, SB2 stand for push button.(provided by users themselves) Number "1"、"2"、"3" stand for number of wiring terminals.

Voltage rating: AC50/60Hz 230V 400V, DC 220V

Wiring diagram of type CD Electromagnetic operation device and motor-driven operation device (fitting AM1-400. 630. 800) see belows (wiring diagram of the external accessories of the breaker in the dotted frame)

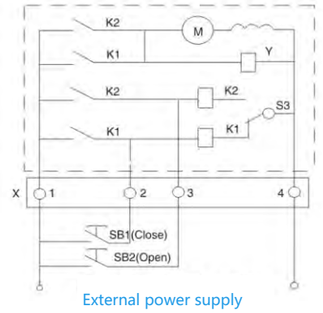

External power supply

Code description: SB1, SB2 stand for push button. (provided by users themselves) "X" stands for line connection terminals

Voltage rating: AC50/60Hz 230V 400V, DC220V

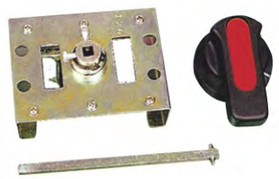

Rotary handle operation device

Rotary handle operation device

The mechanism is used with moulded case circuit breaker to operate the draw-out panel. Power distribution panel and supply box outside the panel by turning the handle ,and to ensure the door of panel would not be openned when the breaker being on.

The hand-drive mechanism can be equiped with two types of operation, one is "A" model square handle, the other is "B" model round handle.

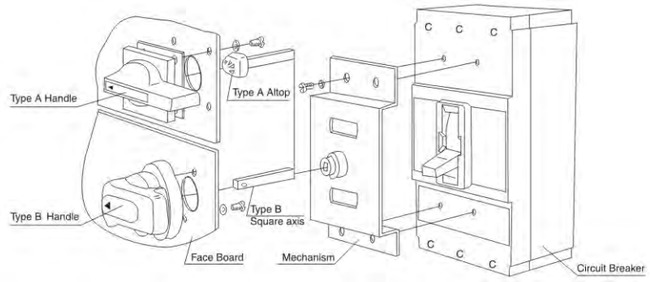

Release pattern and accessories code

Line Handle

UVR: Under-voltage release; SHT: Shunt release;
AL: Alarm contact AX: Auxiliary contact;

Release pattern and accessories code	Name	Type	AM1-63,100,250		AM1-400		AM1-630		AM1-800	
200,300	Without accessories		200: magnetic release (only short circuit protection) 300: thermal magnetic release (both overload and short ci rcuit protection)							
208,308	Alarm contact		AL		AL		AL		AL	
210,310	Shunt release		SHT		SHT		SHT			SHT
220,320	Auxiliary contact		AX		AX		AX		AX	
230,330	Under- voltage release			UVR		UVR		UVR	UVR	
240,340	Shunt release Auxiliary contact		SHT	AX	SHT	AX	SHT	AX	AX	SHT
250,350	Shunt release Under - voltage release		SHT	UVR	SHT	UVR	SHT	UVR	UVR	SHT
260,360	Two group of auxiliary contact		AX	AX	AX	AX	AX	AX	AX	AX
270,370	Under- voltage release Auxiliary contact		AX	UVR	AX	UVR	AX	UVR	UVR	AX
218,318	Shunt release Alarm contact		AL	SHT	SHT	AL	AL	SHT	AL	SHT
228,328	Alarm contact Auxiliary contact		AL AX		AL	AX	AL	AX	AL	AX
238,338	Under- voltage release Alarm contact		AL	UVR	AL	UVR	AL	UVR	AL UVR	
248,348	Shunt release, Alarm contact, Auxiliary contact		AL AX	SHT	SHT	AL AX	AL AX	SHT	AL AX	SHT
268,368	Two group of auxiliary contact, Alarm contact		AL	AX	AL AX	AX	AL AX	AX	AL AX	AX
278,378	Shunt release, Alarm contact, Under - voltage release		SHT	AL UVR	AL UVR	SHT	AL UVR	SHT	SHT	AL UVR



Under-voltage release



Shunt release



Alarm contact

According to user's demands, accessories could lead to direct wire outcoming or line wiring terminals could be added(please mark out in case of placing order).

● Under-voltage release

Wring diagram of the under-voltage release connected externally (the internal accessories in the dotted fram)

Ue: AC230V. 400V

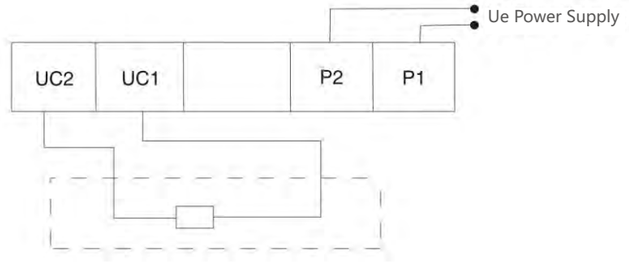

When the operation voltage is 35%~70% of the rated voltage, the under-voltage release should make the breaker trip correctly.

When the operation voltage is 85%~110% of the rated voltage, the under-voltage release should make the breaker close.

In case of the operation voltage less than 35% of the rated voltage, the under-voltage should prevent the breaker from closing.

Note: Only the under-voltage release should be energized in advance, the breaker could be recramped and turned-on, otherwise the breaker will be damaged.

● Shunt release

Wring diagram of the shunt release (the internal accessories in the dotted frame) "K" is the slow motion switch normal-close contact connect the coil in series in the shunt release. It turns-on or turns-off automatically as soon as the breaker on or off.

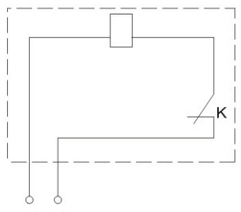

Voltage rating: AC230V 400V, DC 110V 220V

The shunt release should make the breaker trip reliably when the operation voltage is 70%~110% of the rated control voltage.

● Alarm contact

The position of the breaker in "off" or "on"	
The position of the breaker in "free trip" (alarm)	B11and B12 switch from "close" to "open", status of B11 and B14 switch from "open" to "close"



Auxiliary Contact

● Auxiliary Contact

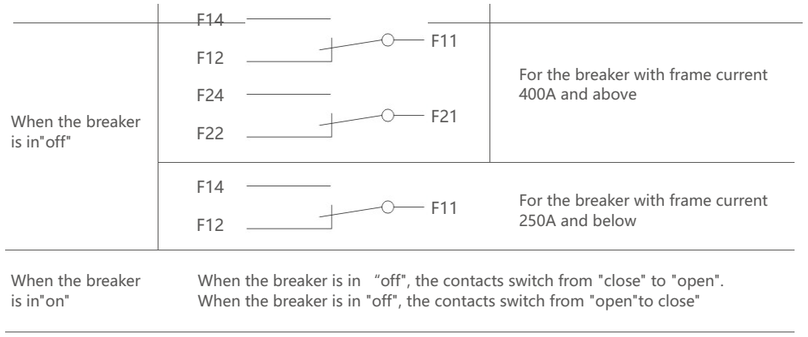

○ Outline and Installation Dimensions (mm)

Type	Outline Dimensions (mm)																												Installation Dimensions		
	Front panel connection														Back panel connection							Plug-in connection										
	W	W1	L	L1	L2	H	H1	H2	H3	H4	C	D	E	F	G	W2	W3	L4	H5	H6	OD	OD1	L5	L6	H7	H8	H9	H10	J	K	Dd1	M	A	B	Dd
GTM1-63L	76	50	135	170	117	74	92	20	7	4	85	28.5	48	22	14	100	75	117	44	66	8	8							60.7				25	117	3.5
GTM1-63M	76	50	135	170	117	82	98.5	28	7	4	85	28.5	48	22	14	100	75	117	44	66	8	8							62				25	117	3.5
GTM1-100L	92	60	150	185	132	68	86	24	7	4	88	35.5	50	22	17.5	122	90	129	68	108	26	16	92	168	50	62	74	17.5	56	60	6.5	M8	30	129	4.5
GTM1-100M	92	60	150	185	132	86	104	24	7	4	88	35.5	50	22	17.5	122	90	129	68	108	26	16	92	168	50	62	74	17.5	56	60	6.5	M8	30	129	4.5
GTM1-250L	107	70	165	215	144	86	110	24	5	4	102	31.5	50	22	17	142	105	126	66	110	20	20	94	183	50	69.5	84.5	17.5	54	70	6.5	M8	35	126	5
GTM1-250M	107	70	165	215	144	103	127	24	5	4	102	31.5	50	22	17	142	105	126	66	110	20	20	94	183	50	69.5	84.5	17.5	54	70	6.5	M8	35	126	5
GTM1-400L	182	116	270	370	234	110	160	43	8	6	134	70	89	65	Φ29	198	144	200	65	125	36	36	169	299	60	92	110	21	123	100	8.5	M12	58	200	7
GTM1-400M	182	116	270	370	234	110	160	43	8	6	134	70	89	65	Φ29	198	144	200	65	125	36	36	169	299	60	92	110	21	123	100	8.5	M12	58	200	7
GTM1-630L	182	116	270	370	234	110	160	43	8	6	134	70	89	65	Φ29	240	174	200	65	125	36	36	169	299	60	92	110	21	123	100	8.5	M12	58	200	7
GTM1-630M	182	116	270	370	234	110	160	43	8	6	134	70	89	65	Φ29	240	174	200	65	125	36	36	169	299	60	92	110	21	123	100	8.5	M12	58	200	7
GTM1-800M	210	140	280	380	243	106	145	33	30	128									128														70	243	7.2
GTM-1250M	210	140	393			200																													
GTM-1600M	210	140	393			200																													

Front panel connection

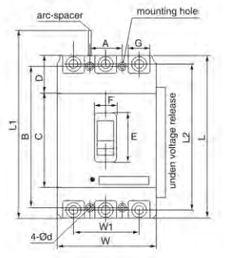

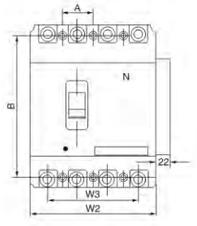

Back panel connection

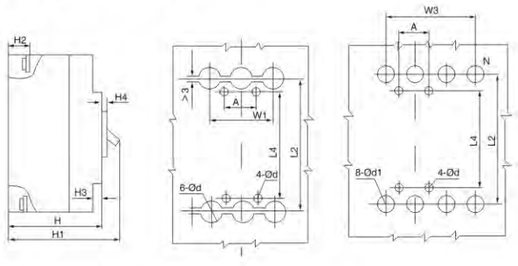

Front panel connection

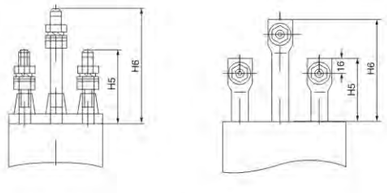

Plug-in connection

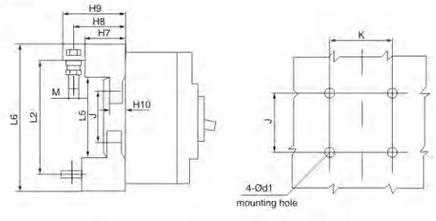

○ Type and Meaning

GT	M	1	E	□	□	□	3	□	□	□
Company code	MCCB	Design sequence	Intelligent type	Frame size rated current	Onerating mechanism Breaking capacity code: Middle type: M Relatively high type: H		Number pole: 3P-3poles 4P-4poles	Trip type and accessory code (see table)	Electric relay code	Type designation



GTM1E-250/3300



GTM1E-400/3300



GTM1E-800/3300

○ Application

GTM1E series intelligent moulded case circuit breaker is developed and manufactured by adopting international advanced technology. It is supplied with rated insulating voltage 800V and usedl for circuit of AC 50/60Hz, rated operating voltage 400V, rated operating current up to 800A of thel circuit breaker infrequent changing over and starting of the motors. The circuit beaker has protecl tion function of overload long delay inverse time, short circuit short delay time limit, short circuit instantaneous and under voltage, which can protect the line and power supply equipment from damage. The circuit breaker can be mounted vertically(i.e. vertical) or horizontally.

The Circuit breaker canl not be poured into the line, that is, only 1,3,5 connect power cord;2,4,6 connect load line.

● **The circuit breaker conforms to following standards:**

IEC60947-1 GBIT14018.1 low-voltage switchgear and control equipment Part I: General
IEC60947-2 GB14048.2 low-voltage switchgear and control equipment, the second part of circuitl breaker and annex with electronic over-current protection circuit breaker additional requirement;
IEC60947-4 GB14048.4 low-voltage switchgear and control equipment contactors and motor starts;
IEC60947-5.1 GB14048.5 low-voltage switchgear and control equipment electromechanical control circuit electrical appliances.
GB22710 electronic controller for low voltage circuit breaker.

○ Main Performance Characteristics

- GTM1E intelligent moulded case circuit breaker is belongs to B category with three grades protection. In the short-circuit conditions,GTM1Ehas a fully selective cooperation with some other shortcircuit protection devices in the same circuit.
- With five tripping feature options. The users can adjust & set the tripping current according to the load current requirements.
- The energy of electronic release is provided by the circuit breaker itself. The current signal and the control source are from the toroidal current transformer which is installed in the circuit breaker. With warning indication: When the load current exceeds the preset current, the LED on the circuit breaker cover indicates yellow;
- With overload indication: When the load current exceeds the set current, the LED on the circuit breaker cover indicates red;
- With a dedicated fire overload no-trip only alarm function. When the load current overload operation, the circuit breaker does not trip, outputs a passive contact, drive the corresponding alarm device;
- Compliance with IEC60947 Appendix F of the electromagnetic compatibility requirements;Dimensions are same to the same frame PSM1 molded case circuit breaker, installation is inter-changeable.

○ Main Technical Performance of Circuit Breaker



Table 1

Type		GTM1E-125		GTM1E-250		GTM1E-400		GTM1E-800	
Accessories code	Pole / Name	3	4	3	4	3	4	3	4
308	Alarm contact								
310	Shunt realese								
320	Auxiliary contact								
330	Under-voltage release								
340	Shunt realese Auxiliary contact								
350	Shunt realese Under-voltage release	—		—		—			
360	Two group of auxiliary contact								
370	Auxiliary contact Under-voltage release								
318	Shunt realese Alarm contact	—		—		—			
328	Auxiliary contact Alarm contact								
338	Under-voltage release Alarm contact	—		—		—			
348	Shunt realese Auxiliary contact Alarm contact	—		—		—			
368	Two group of auxiliary contact Alarm contact								
378	Auxiliary contact Under-voltage release Alarm contact	—		—		—			

○ .Capacity Loss and Coefficient Ratio

Capacity loss

Type	Charging current	Total power loss for three phases	
		Front-panel board or back panel board connection	plug-in connection
GTM 1E-125	125	35	
GTM 1E-250	250	62	40
GTM 1E-400	400	115	70
GTM 1E-800	800	262	210

Coefficient ratio due to environment temperature factor

Table 4

Environment temperature / Type factor	+40℃	+45℃	+50℃	+55℃	+60℃
	Coefficient ratio	Coefficient ratio	Coefficient ratio	Coefficient ratio	Coefficient ratio
GTM1E-125	1In	0.95In	0.89In	0.84In	0.76In
GTM1E-250	1In	0.96In	0.91In	0.87In	0.82In
GTM1E-400	1In	0.94In	0.87In	0.81In	0.73In
GTM1E-800	1In	0.88In	0.83In	0.79In	0.76In

○ Main Technical Specifications

Type		GTM1E-125		GTM1E-250		GTM1E-400		GTM1E-800	
Frame current(InmA)		125		250		400		800	
Breaking capacity		M	H	M	H	M	H	M	H
Rated current		32A(16,20,25,32)		100,125.140.160 180,200.225.250		200,225,250.280 315,350,400		630,640,660,680 700,720,740,760 780,800	
		125A(40,50,60,70, 80,90,100,125)							
Pole		3,4		3,4		3,4		3,4	
Rated insulating voltage		AC 690V							
Rated operating voltage		AC 400V							
Rated impulse withstanding voltage		6000V		8000V		8000V		8000V	
Bated frequency		50Hz							
Flashover distance	Top-down	≤50		≤50		≤80		≤80	
	Left-right	0		0		0		0	
	Front-back	0		0		0		0	
Using category		A				B			
limiting short-circuit breaking capacity		50	65	50	70	65	85	65	85
Rated service short-circuit breaking capacity		35	50	35	50	42	65	42	65
Rated withstand short-circuit current		1.5	1.5	5	5	8	8	10	10
Operating lift (time)	Elctrical	1500		1000		1000		500	
	Mechanical	8500		7000		4000		3000	

○ Outline and Installation Dimension

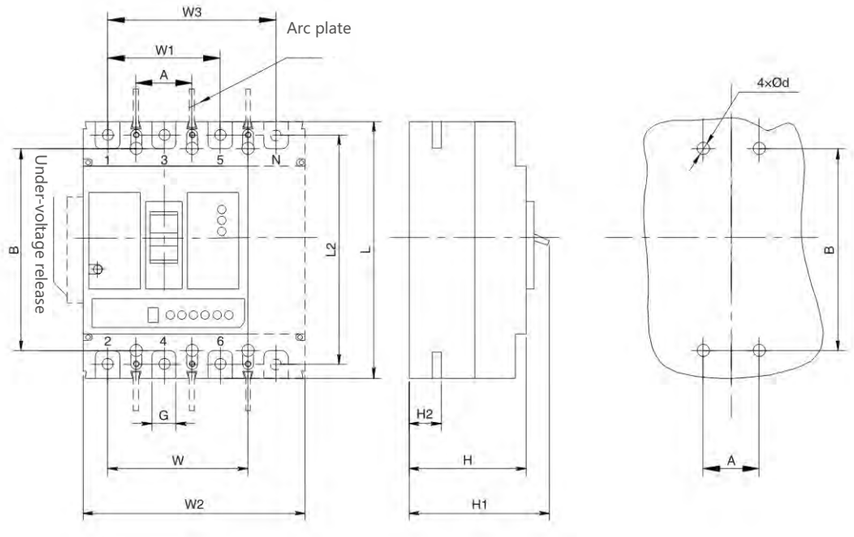



Our goal is the sea of stars!

ZHEJIANG ZHEGUI ELECTRIC CO,. LTD.

Address: No.316 Weishiyi Road , Yueqing City,
Zhejiang Province, China
ProvinceTel: 0577-62657695/626577696
Email address:service@giantele.com
Website: www.giant-electric.com

Giantele®

GTW1

Air circuit breaker

www.giant-electric.com

1. purpose and scope

GTW1 Series intelligent universal circuit breakers (hereinafter referred to as the breaker), suitable for AC 50Hz, rated current rated voltage of 400V, 690, 630A~6300A distribution network, mainly used to distribute power and protection circuit and power supply equipment from overload, undervoltage, short circuit, single-phase grounding fault of hazards. The circuit breaker has a variety of intelligent protection function, can be selective protection and precise to avoid unnecessary power, improving reliability of power supply. Simultaneously with the open communication interface, remote, control and automation system to meet the requirements. Impulse withstand voltage circuit breakers at an altitude of 2000 metres 8000V (different altitude correction according to the standard, up to 12000V). The intelligent controller for circuit breaker without and sensors for use in isolation, labeled —⁄⊢—.

Breaker IEC60947-2 low-voltage switchgear and controlgear Part II: low-voltage circuit breakers and GB14048.2-2001 the low-voltage switchgear and control equipment such as low-voltage circuit breaker standard.

2. types and what they mean

GT W1- □ / □

- Number of Poles (3: three pole, 4: four pole)
- Shell grade rated current
- Design number
- Intelligent air circuit breaker

2.2 classification
2.2.1 installation
A.-fixed
B.-drawer
2.2.2 number of poles: three-pole and four-pole
2.2.3-by mode of operation
A. Electrical operated
B. manual operation (repair and maintenance)
2.3 tripping device type
Intelligent controller, under the instantaneous voltage (or delayed) release, and shunt release.
2.4 performance intelligent controller
A. intelligent controller are: h-type (communications), m (General Intelligence), l-(budget);
B. overload for long-time inverse-time overcurrent, short delay inverse time, definite and instantaneous functions. Composition can be set by users themselves need protection;
C. single phase grounding fault protection features;
D. display: the display, operation current display setting current, line voltage display (voltage display should be made at time of order);
E. alarm: overload alarm.
F. self-inspection function: hot post, computer diagnosis;
G. test function: test controller operation characteristics.

3. normal working conditions and installation parts

3.1 ambient air temperature
Upper limit value of not more than + 40 ℃, the lower limit is not lower than-5 c, 24h average no more than + 35 c;
Note: the minimum value is-10 ℃-25 ℃, working conditions, user factory should be affirmed;
Top value exceeding + 40 ℃ or lower limit below-10 ℃-25 ℃ work conditions, the user shall consult with the factory.
3.2 installation site altitude does not exceed 2000m.
3.3 atmospheric conditions
Relative temperature differences in the atmosphere when the ambient air temperature + 40 ℃does not exceed 50%, can have higher relative temperatures at lower temperatures, most wet month of average monthly maximum relative humidity of 90%, and the monthly mean minimum temperature of + 25 ° c and for taking into account the temperature changes that occur on the surface of gel. Set, the user shall consult with the factory.
3.4 pollution level 3
3.5 protection degree: IP30, circuit breaker installed in the Cabinet Chamber and installed sealing frame protection class IP54.
3.6 use category: class b or class a
3.7 install class
Rated voltage of 660V (690V) and below undervoltage tripping of circuit breaker, power transformer primary coil used for installation category IV secondary circuit and control circuit installation category III.
3.8 installation conditions
Fault should be installed according to the requirements of this specification, circuit breaker the vertical inclination does not exceed 5 degrees (mine breaker inclination does not exceed 15 degrees).

4. technical data and performance.

4.1 rated circuit breaker ampere meter, see table 1.

Table 1

Shell grade rated current InmA	Rated current InA
2000	630、800、1000、1250、1600、2000
3200	2000、2500、2900、3200
4000	3200、3600、4000
6300	4000、5000、6300

4.2 breakers of rated short circuit breaking capacity and short-time withstand current see table 2, circuit breakers arcing distance as "zero" (that is, outside the circuit breaker no flying no ARC), as shown in table 2.

Table 2

Shell grade rated current Inm A		2000	3200	4000	6300
Rated limited short-circuit breaking capacity Icu O-CO (KA)	400V	80	100	100	120
	690V	50	65	65	85
Rated short-circuit making capacity (KA) NX Icu/cosO	400V	176/0.2	220/0.2	220/0.2	264/0.2
	690V	105/0.25	143/0.2	143/0.2	187/0.2
Rated short circuit breaking capacity Ics O-CO-CO (KA)	400V	50	65	65	100
	690V	40	65	65	75
Rated short-time withstand current lewv 1S delay 0.4s,O-CO (KA)	400V	50	65	65/80(MCR)	85/100(MCR)
	690V	40	50	50/65(MCR)	65/75(MCR)
Note: the line breaking capacity in the same.					

4.3 circuit breaker the maximum dissipation power is 360W. Circuit breaker rated continuous current in different ambient temperatures, as shown in table 3.

Table 3

Ambient temperature GTW1	630A	800A	1000A	1250A	1600A	2000A
40	630A	800A	1000A	1250A	1600A	2000A
50	630A	800A	1000A	1250A	1550A	1900A
60	630A	800A	1000A	1250A	1550A	1800A
Note: 2500A and above capacity-reducing factor of 0.9, 6300A 4000A did not fall in.						

4.4 had intelligent current controller and protective function of overcurrent protection characteristics
4.4.1.1 Ir setting of controllers (I/In) and the error, as shown in table 4.

Table 4

Long time delay	Short delay		Instantaneous		Ground fault		
Ir1	Ir2	Errors	Ir3	Errors	Ir4		Errors
(0.4-1)In	(0.4-15)In	±10%	In−50KA(Inm=2000A) In−75K(Inm=3200~4000A) In−100KA(Inm=6300A)	± 150%	Inm=2000~4000A (0.2~0.8)In max 1200A	Inm=6300 (0.2~1.0)In	± 10%
Note: when both (required) three protection, the setting value cannot be crossed.							

4.4.1.2 delay inverse-time overcurrent protection characteristics I2TI= (1.5IRI "u (1.05~0.2) Ir 1 time is shown in table 5, a time error of ± 15%

Note: tL-long time 1.5Irl the whole time, TL long delay time, as shown in table 5.

Table 5

1．05 I r I	1.3Irl	Setting time of 1.5Irl s	15	30	60	120	240	480
>2H doesn't work	<1H doesn't work	2.0Irl time s	84	16.9	33.7	67.5	135	270

4.4.1.3 short delay time overcurrent protection characteristics

Short-delay over-current protection for setting time limits, if low expansion for inverse time-time, its characteristic: I2Ts = (8Ir) 2ts,TS, designed for general delay time when VHF >8Irl, automatically convert time characteristic, time characteristic, as shown in table 6.

Time error is ± 15%

Table 6

Delay time s				Returns the time s			
0.1	0.2	0.3	0.4	0.06	0.14	0.23	0.35

4.4.1.1 over-current tripping characteristic as shown in Figure 1, ground-fault protection features as shown in Figure 2.

M-mode intelligent controller functions.

A. ammeter function.

Displays the current of each phase and the earth leakage current, display the maximum phase current, can also display tuning, testing and fault current value or values.

B. voltmeter function displays the line voltage, normal maximum.

C. remote monitoring and diagnostic capabilities.

① controller with native self diagnosis function.

Issues an error when the computer fails the "e" display or alarm, and restart the computer, user needs, circuit breaker can also be broken.

② authorities when the ambient temperature reaches 80 degrees centigrade, alarm, and in smaller current (when a user needs to) breaking the breaker.

③ intelligent controller with overload protection, grounding, short circuit, load monitoring, alarm, trip directions (OCR) signals through electric shock or optocoupler outputs

An external remote control user, contact capacity DC28V, 3 a; AC125V、3A。

D. setting capabilities

Use Set + - Storage Four button the controller parameters are set。 Press Set To the whole set. State（Status indicator）, Then press + or - Key adjust the parameters to the desired value, And then press Storage, Stored light setting is locked。Controller parameters must not cross set。Controllers after power loss reduction, And then press the key, Recycled checks set various parameters。

E. Test function

Use Set + - Release Do not release Reset Key mapping, Check on the controller characteristics of protection。 Use Set + - key adjust the test of an analog fault current（Note: do not stored lock）, Then press Release or Do not release key test, Controller troubleshooting。press Release key, Shear line equipment Division, press Do not release key, Circuit breaker does not break, While the controller indicates normal state。Tests need to be Reset or Clear lamps key, can other tests。

Note: to test, setting of earth leakage trip or alarm location, test release, with a priority less than overload protection. Test procedure in the event of failure, the controller automatically stops all tests failed to address.

F. load monitor

Set two a whole set value, ILC1 whole set range (0.2~1) In,Ilc2 whole set value range (0.2~1) In,ILC1 delay characteristics for anti-time characteristics, its time whole set, and value for extended Shi whole set worth 1/2;ILc2 characteristics has two species, first species for anti-time characteristics, its time whole set value for extended Shi whole set value of 1/4, second species for set time, its extended time for 60s. This II species delay function, former for current close overload whole set value time broken subordinate not important load, which is for Dang current over lLc1 whole set value, makes delay points broken subordinate not heavy load Hou, current declined, makes main circuit and important load circuit and keep power, dang current Xia down to Ilc2 Shi, by must delay Hou issued instruction again connected subordinate has resection had of circuit, recovery whole system of power. The two types of monitoring and protection, choose one user, monitor properties as shown in Figure 1, Figure 2, a.

G.MCR release and simulated trip protection, according to user requirements can be turned off, breaking tests generally require short delay shutoff.

① MCR through broken clasp protection is mainly used in fault status close (Controller powered on moments), the controller has a low short circuit currents

Circuit-breaker function. Factory setting 10KA, error ± 20%, set current can be set according to user requirements.

② When the controller has a large short-circuit current, the signal without chip to handle, tripping signal functions directly.

H. thermal memory function

Controller overload or short-circuit delay after release, until the controller is not powered down, with simulation of bimetallic characteristics of memory overload energy 30min release ends, short delay end of 15min release of energy during overload, short delay faults, tripping time is shorter, the controller off, automatic zero energy.

Monitoring features

Figure 1

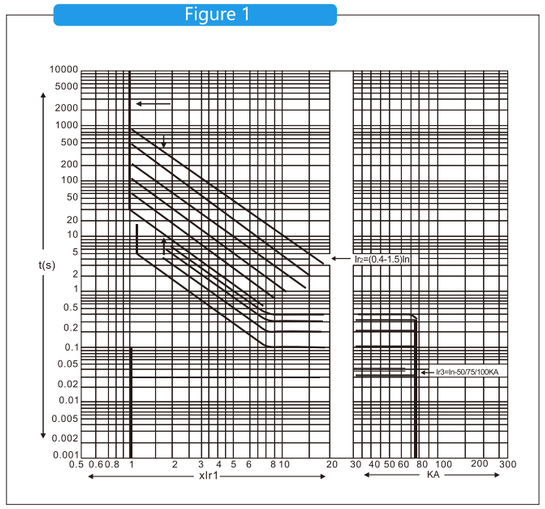

Figure 2

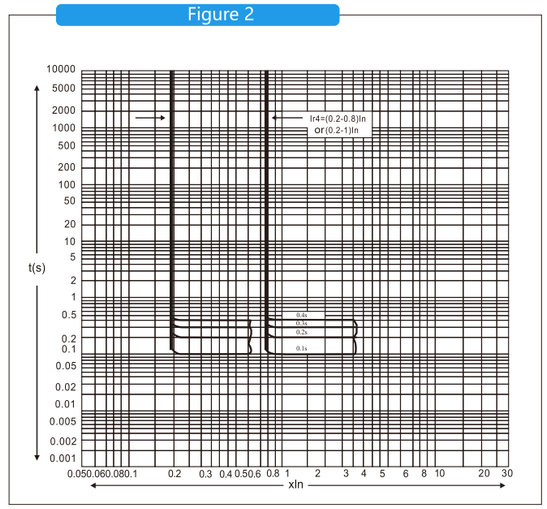

Figure 3

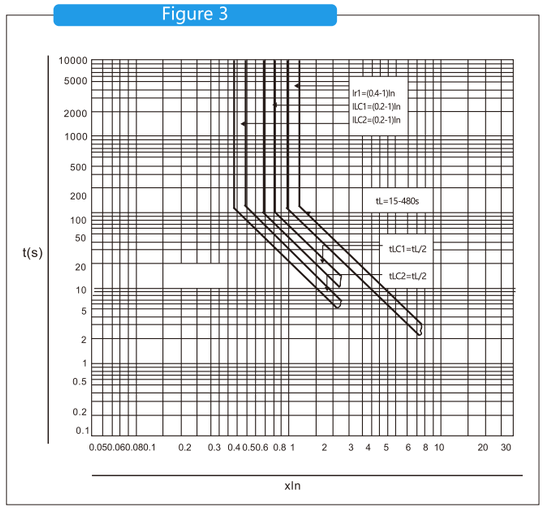

Figure 4

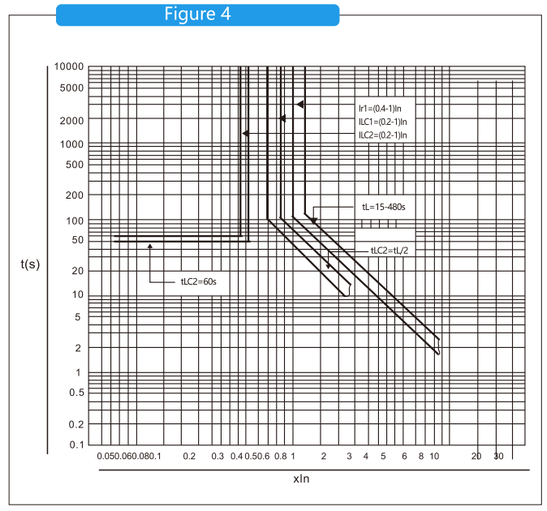

4.4.3H-intelligent controller

In addition to the functions of m-all, with serial communication interface, through the communication interface can be a slave of the giant network systems (hereinafter referred to as system), 1-2 computers as the main station, a number of intelligent circuit breaker or other communication elements as a slave, systems network architecture shown in the following figure. Circuit breaker unit, the system can achieve a distance of "four remote" feature, a variety of parameters and parameters of power system monitoring, intelligent circuit breaker current running status monitoring, protection, limited adjustment of parameters and download, intelligent circuit breaker points, operations control. System is suitable for a variety of power plants, electric power plants, and small substations, industrial and mining enterprises, such as digital distribution monitoring system construction and renovation.

Dedicated communication protocol interface of the connection diagram is as follows:

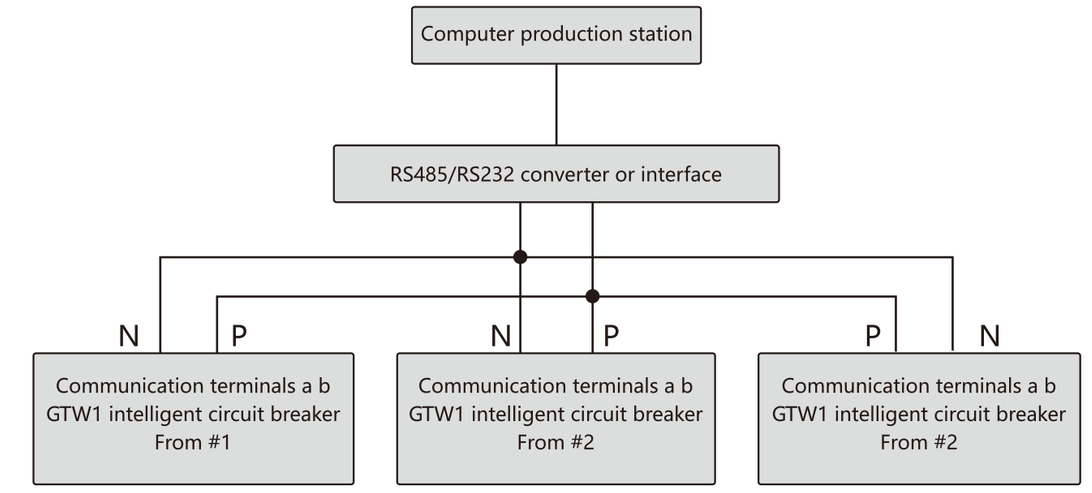

Circuit breaker products based on common DP protocol connection diagram is as follows:

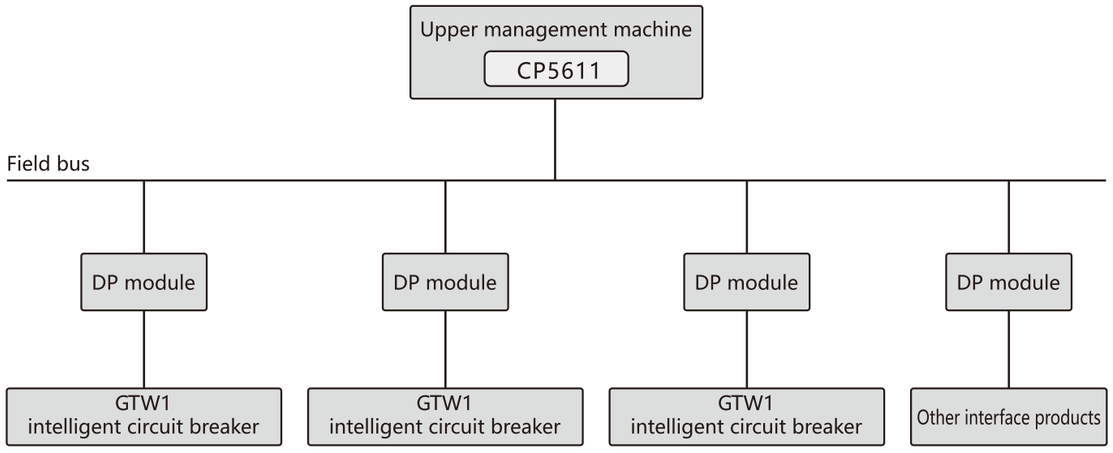

4.4.3.1 system structure

A. hardware structure of data communication network system

Intelligent circuit breaker provides standard RS485 communication interface, from the circuit breaker terminals 10 and 11th, leads;

System of communication media: category a shielded twisted-pair cable. B. the main characteristic of the network

Bi-directional serial data transmission, products provide a variety of communications protocols: the low voltage electrical data communication protocol V1.0 PROFIBUS-DP MODEBUS and so on.

Strict master-slave mode, the primary station is the initiator of communication and control, communications from the station can only be used with the main station, rather than communicating directly with other stations.

Communication baud rate to 9600bit/s, communication 1.2km, typical for PROFIBUS-DP communication baud rate up to 187.7kbit/s.

C. monitoring software
Software according to different requirement, the desired configuration monitoring and management software applications. Intelligent circuit breaker, running monitoring operation and a variety of daily management functions can be realized.
4.3.2 system functions
A. remote control
Remote control by means of master in the computer system of each slave breaker store, closed and disconnected operation control. Operator interface select the appropriate object from the system, using the mouse to click the remote control button system that provides the current operating state of the object. Operator after you enter the user ID password, issue a remote "" or "" directive. System passes the instructions from the station to the appropriate circuit breaker, from the stand after receiving the instruction, that is, according to the established time off, closing and storage operations, and report to the master remote control results.
B. remote adjustment
Remote adjustment is through the main station from the station computers to the protection setting value to set. On the master computer have all the setting from the table setting of protection of station, the operator interface, select the object from the system, use the mouse to click the remote control button. System that provides the current settings for all protection setting value of the corresponding object, and the object's protection setting value, the operator after you input your password, you can select the parameter in the parameters table, and then click the appropriate button, master will download to the appropriate parameters of the slave, and reports the results of remote control. From the stand after receiving the instruction, to revise their protection setting value.
C. telemetry
Remote sensing refers to the computer through the main station on the run from the station's power grid parameter real-time monitor. Communication up to submit work parameters are as follows: the real time a, b, c, and n current value, UAB, UBCA, UCA voltage values, and so on.
Fault logging records the following parameters when a, b, c, and n current value, UAB, UBC, UCA voltage value, faults, fault time, and the failure is logged in the failed database.
Computers in a bar chart, table displays the current absolute value current and voltage in real time, real time curve displays the health of each node.
D. far away
Remote refers to models of the master computer to view the slave; closed and disconnected state. The protection setting value, and run from the station and fault conditions and other information.
Submission to PC from circuit breaker parameters are: switch model, switch (/min), fault information, alarm set integer-valued information, protection and so on.
E. other functions of the system
Apart from four remote control functions, the system can also be used for a variety of management functions: alarm (information screen, image promotion, events, print, voice dialing, alarm), recording, repair tone, shift management, load analysis, multiple report printing.
L-type intelligent controller
L-pull switch and controller using dip switches tuning mode, overload of long delays, short delay time, instantaneous and ground fault four protection features, as well as a failed State, load current lamp indicates the functions, but no digital display functions, functions less than m and h-complete. Selects for the users in the General case.
4.5 the performance of circuit breakers
Circuit breakers operation operation cycles, as shown in table 7.

Table 7

Shell grade rated current (a)	Total number of operating cycles
2000	10000
3200、4000	5000
6300	2000

4.6 the circuit breaker shunt release, under-voltage release, motor-operated institutions, energy release (close) electromagnets, intelligent controller operating voltage and power requirements, see table 8.

Table 8

Project required power			AC(50Hz)		DC	
			220V	380V	110V	220V
Shunt release			24VA	36VA	24W	24W
Undervoltage release			24VA	36VA	–	–
Closing electromagnet			24VA	36VA	24W	24W
Electric operation mechanism	Rated current of breaker housing	2000A	85VA	85VA	85W	85W
		3200、4000A	110VA	110VA	110W	110W
		6300A	150VA	150VA	150W	150W
Intelligent controller power supply voltage						
Note: reliable operation voltage range shunt tripping device for 70%~110%, closing electromagnet and operator for 85%~110%						

The performance of voltage release under 4.7 circuit breakers, see table 9.

Table 9

Category		Undervoltage delay tripping device	Under voltage instantaneous trip
Release action time		Delay 1.3.5s	Instantaneous
Breaker tripping voltage value	35%~70%Ue	Reliable circuit breaker disconnect	
	≤35%Ue	Circuit-breaker cannot be closed	
	(85~110%)Ue	Circuit breaker is reliably closed	
½ delay time if the power when the voltage is restored to 85%Uc		Circuit breaker disconnect	
Note: the delay time accuracy is ± 10%			

4.8 the performance of auxiliary contact
4.8.1 of conventional thermal current of auxiliary contact for 6 a.
4.8.2 auxiliary contact form: four normally open normally closed four.
4.8.3 auxiliary contact of abnormal making and breaking capacity

As determined by the use of auxiliary contact switch breaking capacity under normal use conditions, as shown in table 10.

Table 10

Using categories	Connect			Division			Switching operation cycles and operating frequency		
	I/Ie	U/Ue	COS0 or TO.95	I/Ie	U/Ue	COS0 or TO.95	Number of operation cycles	Frequency of operating cycles per minute	Power up Time (s)
AC−15	10	1.1	0.3	10	1.1	0.3	10	6 (or frequency with the main loop operation)	0.05
DC−13	1.1	1.1	6Pe	1.1	1.1	6Pe			
Note: when Pe -6Pe ≥ 50W.To.95 ceiling less than 300ms									

4.8.4 auxiliary contacts making and breaking capacity under normal conditions, as shown in table 11.

Table 11

Using categories	Connect			Division		
	I/Ie	U/Ue	COS0 or T0.95	I/Ie	U/Ue	COS0 or T0.95
AC−15	10	1	0.3	1	1	0.3
DC−13	1	1	6Pe	1	1	6Pe

4.9 disconnected position keys

Circuit breakers with "disconnected position key lock" attachment (order). Disconnect circuit breaker can be locked in position, whatever the closing button or release (close) electromagnet cannot make the circuit breaker closed.

5. architecture overview

Fixed circuit breaker main contacts system, intelligent controller, manual, and electric operation, install Board;
Drawer type circuit breaker main contacts system, intelligent controller, manual operating mechanisms, electric operating mechanisms, seat the drawer;
Circuit breaker for the stereoscopic arrangement, has the characteristic of compact structure, small size. Closed contact system within the insulated floor, the contacts are separated by insulation boards for each phase, to form a small, intelligent controller, manual operating mechanism, electric operator formed in front of its separate units in the order, such as one unit is broken and can be removed as a whole put on new one.
Circuit breaker by insert breaker with drawers and drawer seat. Pull the seat rails into the drawer, insert the circuit breaker is located on the guide rail in and out of drawers, by inserting a circuit breaker on the bus and drawers on the bridge contact insert the coupling connected to the primary circuit.
Drawer type circuit breaker has three working positions: the "connected" position, the "test" position, "" separation of location, location transformation achieved through precession of the handle or spin out. Three indicators for the location of drawer low beam by instructions on the display.
When in the "connected" position, and secondary circuits are connected to the primary loop; when in the "test" position, the main circuits disconnected and insulated partitions, only the secondary circuit connecting, make any necessary action tests; when in "isolated" position, main circuit and all secondary circuits disconnected.
And drawer type circuit breakers with mechanical interlock device, circuit breaker only to connect or experimental locations to make the circuit-breaker closed, and in connection with the middle of the test circuit breaker cannot be closed.

5.1 circuit breakers interlocking mechanism (for drawer type, fixed), users can separate interlocking mechanism for two or three conversions, see Figure 5 a, B5.1.1 lever interlock

Figure 5A

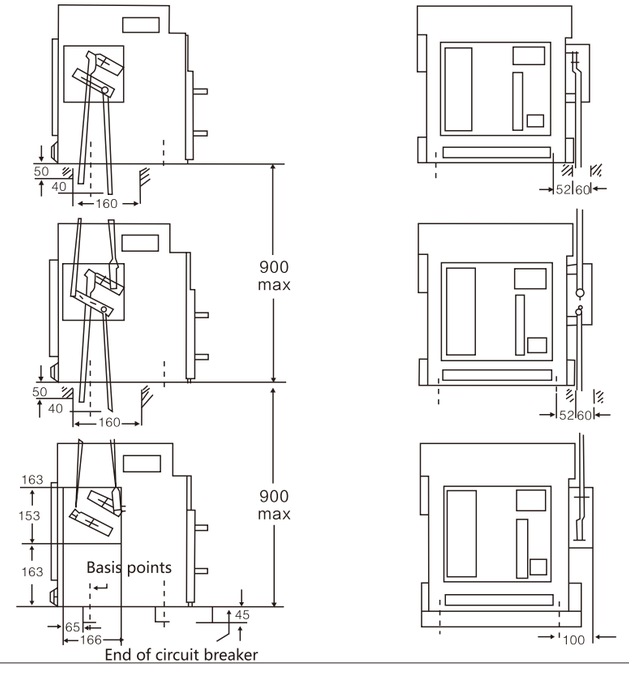

3 vertical lever interlock installed circuit breaker. 2 circuit breakers interlocking just removed the top of the device.

5.1.2 soft interlock (horizontal, vertical)

Figure 5B

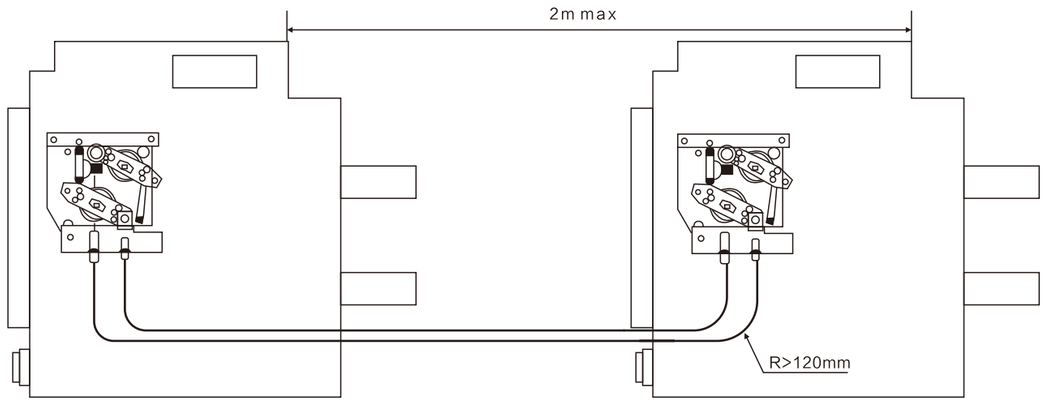

5.2 ground fault protection circuit is shown in Figure 6 a, b, c, DC.

GTW1 three-pole circuit breaker figure 6A

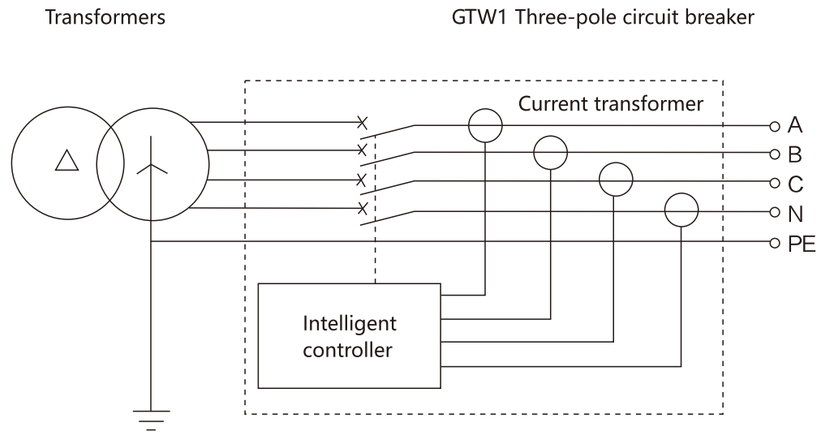

Type 3PT
Difference type ground fault protection signal is taken from the vector sum of three phase currents (three phase unbalance)

GTW1 pole circuit breaker 6B

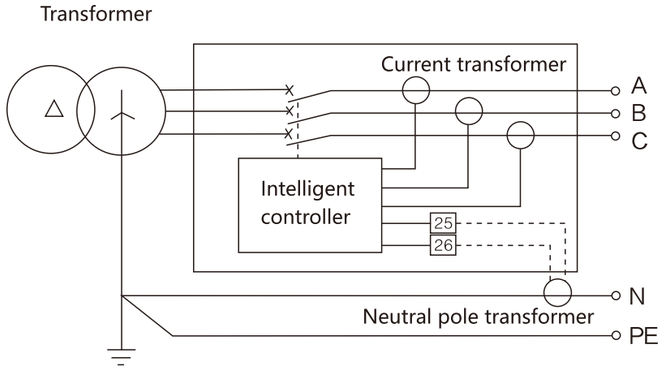

Type 4PT
Difference type ground fault protection signal is only taken from three phase current and N phase current vector

GTW1 pole circuit breaker 6C

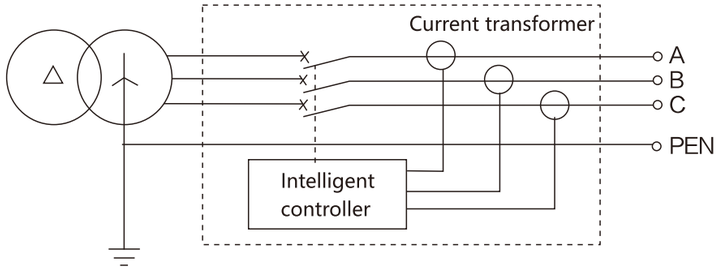

(3P+N) T type
The neutral pole transformer, the difference type ground fault protection, the signal takes three phase current and the N phase current vector and

GTW1 pole or pole circuit breaker 6D

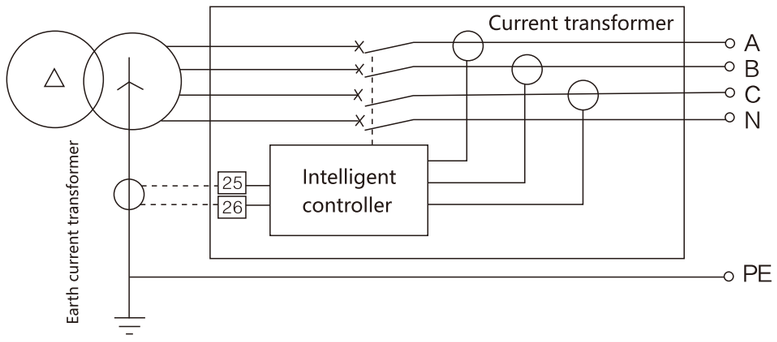

(3P+N) W type
Grounding fault protection of the ground current in the external neutral electrode, the signal is directly connected to the neutral point of the main power supply.

5.3 external single-phase grounding protection function
External type transformer (neutral pole transformer or ground current transformer) as the form of attachment to the user. By the user to be set into the bus, and the line (length 2m) connected to the two wiring terminals, #25 circuit breaker #26.

The external transformer center hole (through bus through the maximum allowable size as follows):

type	Width	Width
GTW1-2000 GTW1-4000/4	61	21
GTW1-3200And above (except GEW1-4000/4 outside)	87	31

5.4 terminal
There are 47 general terminal blocks of the circuit breaker, which is simple and easy to use. The wiring diagram is shown in figure 7A, B, C

Controller for the m or l-basic function of figure 7A

Intelligent controller wiring #1, power AC power input (DC, U1, U2, from the DC power module input) #265, #26 external neutral electrode or ground current transformer input

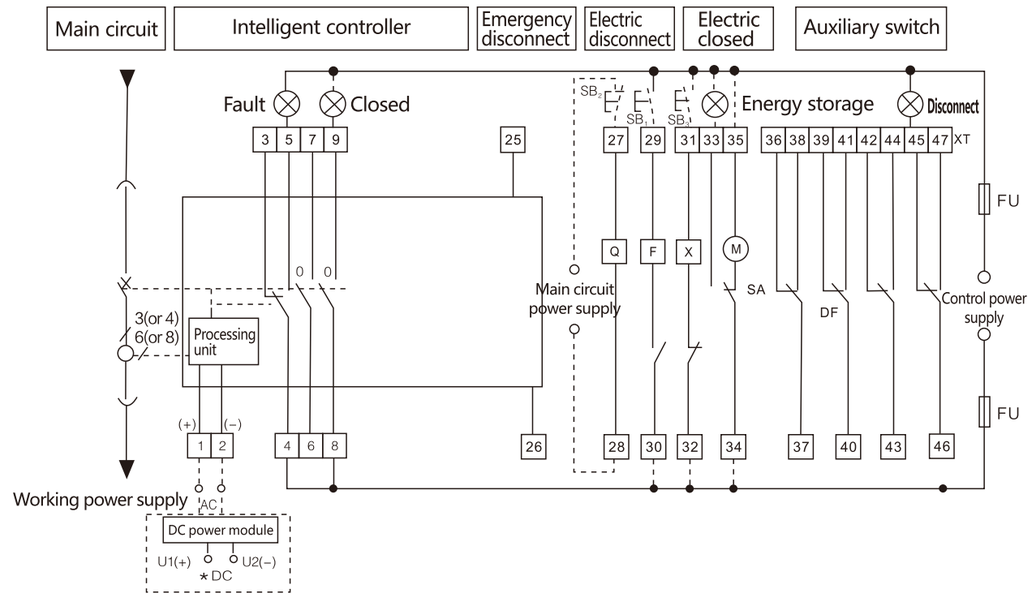

Note:
1. If f, x, m, control supply voltage is different in each different power supplies. For short-term work in f, x, time is not more than 4S.
2. #35 terminal can be connected directly to the power supply (automatic storage), and can also be daisy-chained always on button plug in the power supply (manual energy).
3. If the user, #6-#7 output terminals normally closed contact.
4. external attachment user-owned.
5.* When DC power is intelligent controller of power, shall be increased by the DC power supply module (#1, # terminals are not directly connected to the AC power). Secondary wiring as shown in the diagram (DC power supply DC 110V or 220V from U1 (+), U2 (-) input, output end of the DC power supply module separately and the second terminal block terminals 1 (+), 2 (-)).

SB1 shunt button (user-owned)
SB2 undervoltage button (user-owned)
SB3 closing button (user-owned)
DF auxiliary contacts
F shunt tripping device
SA motor micro switch
X closing electromagnet
M Stored energy motor
XT terminal
FU fuse box (User-owned)
Q under voltage release or undervoltage delay tripping device
0 normally open contact (3A/AC380V)
⊗ Signal (user-owned)

Intelligent controller for other wiring

#1, #2 AC power supply input (DC DC power supply module U1, U2)

#12 overload alarm signal output

#14 transient short time delay tripping signal output

#15 long time tripping signal output

#16 ground (or zero) fault trip signal output

#19 signal output common lines

#20 diagnosis signal output

Signal signal1 release (available to shunt or undervoltage actuators)

#65, 26 external electric transformer neutral or on the input

1. the controller signal input to Terminal 12, 14~16, 20, 21, led relay j external output contact signals.

2. the power supply transformer (user needs to input voltage value specified in the order specification) provided by the manufacturer. Power transformers together with relay base into the standard rail, installed in the switch cabinet position by the user.

3. relay type: HH62P, AC/DC24V, user-owned.

4. diagnostic signals output condition:

A, the temperature inside the controller > 80 ℃

B, chip is not working properly;

C. controller power.

5. the user can according to their actual needs, self-selected J12, J14-J16, J20, J21.

Additional features of circuit breaker relay wiring diagram

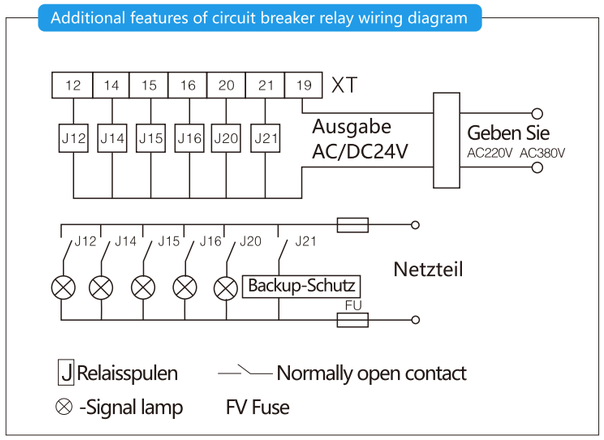

Controller I-additional features figure 7B

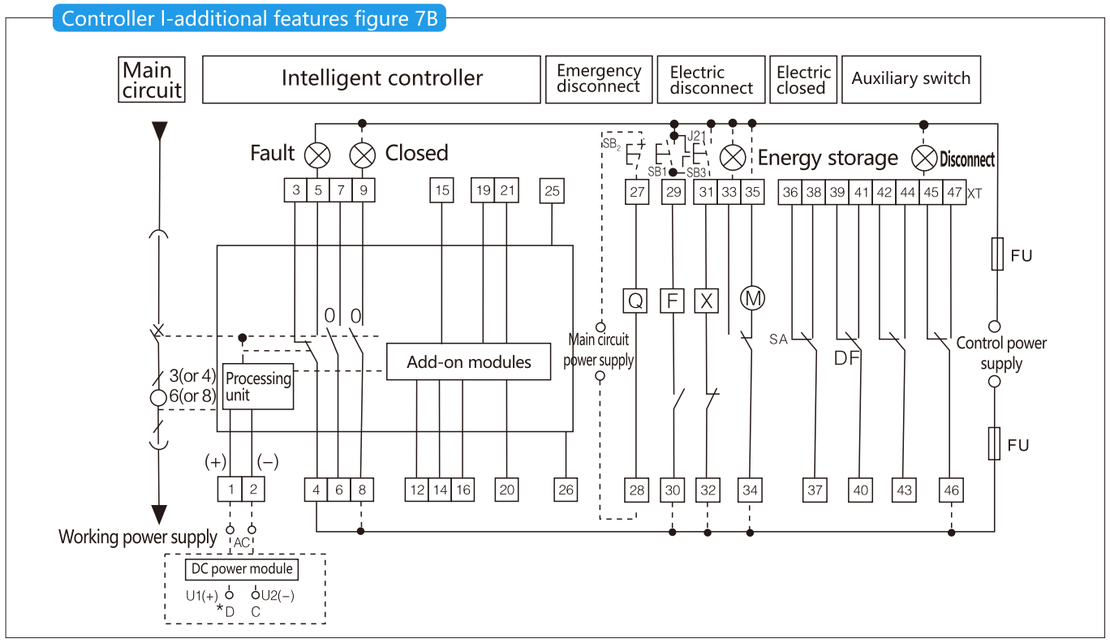

Note:

1) f, x, m, control power supply voltage is not the same as each of the different power supplies. For short-term work in f, x, time is not more than 4S.
2) Terminal #35 can be connected directly to the power supply (automatic storage), and can also be daisy-chained always on button plug in the power supply (manual energy).
3) if the user, #6~#7 output normally closed contact.
4) plus annexes user-owned.
5) * when DC power is intelligent controller of power, shall be increased by the DC current module (#1, are not directly connected to the AC power terminals are not directly connected to the AC power at this time).

Secondary-wiring as shown in figure (DC110V or 220V DC power supply from U1 (+), U2 (-) input, output end of the DC power supply module separately and the second terminal block terminals U1 (+), U2 (-)).

SB1 shunt button (user-owned)	X closing electromagnet	DF auxiliary contacts
SB2 undervoltage button (user-owned)	M-energy motor	F shunt tripping device
SB3 closing button (user-owned)	XT terminal	SA motor micro switch

Q under voltage release or undervoltage delay tripping device 0 normally open contact (3A/AC380V) ⊗Signal (user-owned)

6. circuit breaker positive instructions

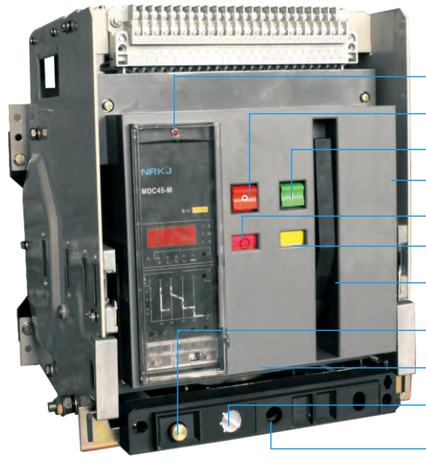

- Fault trip indicator, reset button
- The off button
- Close button
- Disconnect the position lock
- Opening closing instructions
- Storage-release handle
- Manual storage handle
- Shake the handle and its repository
- Panel
- Position indication
- Access device

7.GTW1 Series intelligent universal circuit breaker drawer

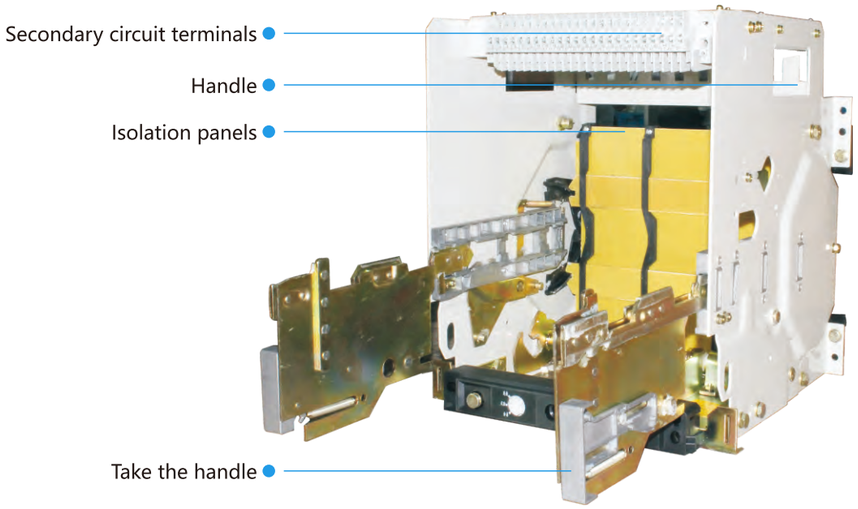

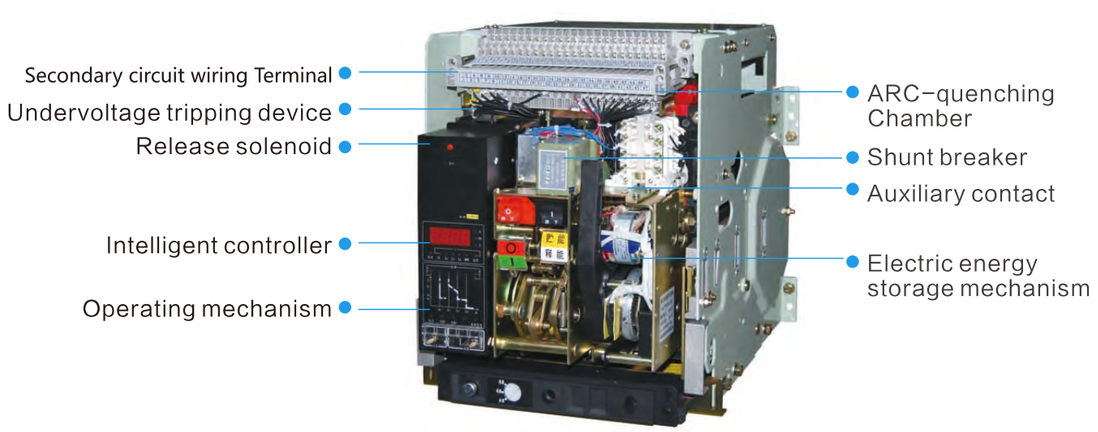

8.the outline and installation dimensions

8.1 mounting dimensions fixed circuit breaker, dimensions (GTW1-2000/3, 2000/4)

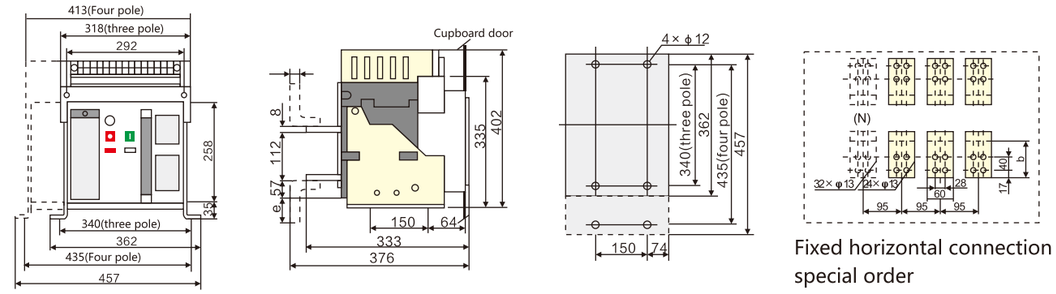

4P switching Center with eccentric Panel hole Center distance for 47.5mm

In	amm	bmm	cmm
400-800A	10	95	38
1000-1600A	15	105	48
2000A	20	115	58

8.2 installation dimensions fixed circuit breaker, dimensions (GTW1-3200/3, 3200/4)

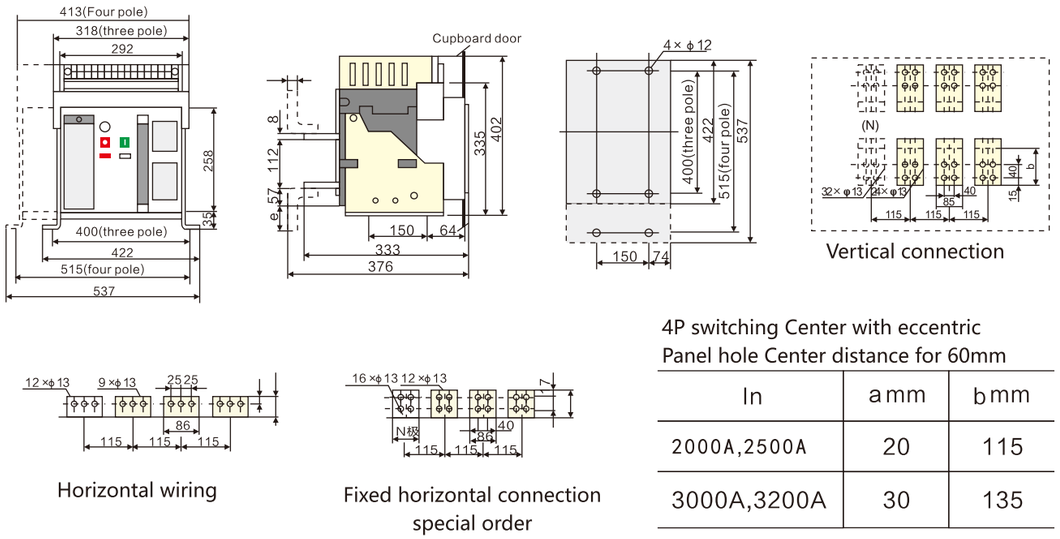

4P switching Center with eccentric
Panel hole Center distance for 60mm

In	amm	bmm
2000A,2500A	20	115
3000A,3200A	30	135

8.4 installation drawer sizes and dimensions (GTW1-2000/3, 2000/4)

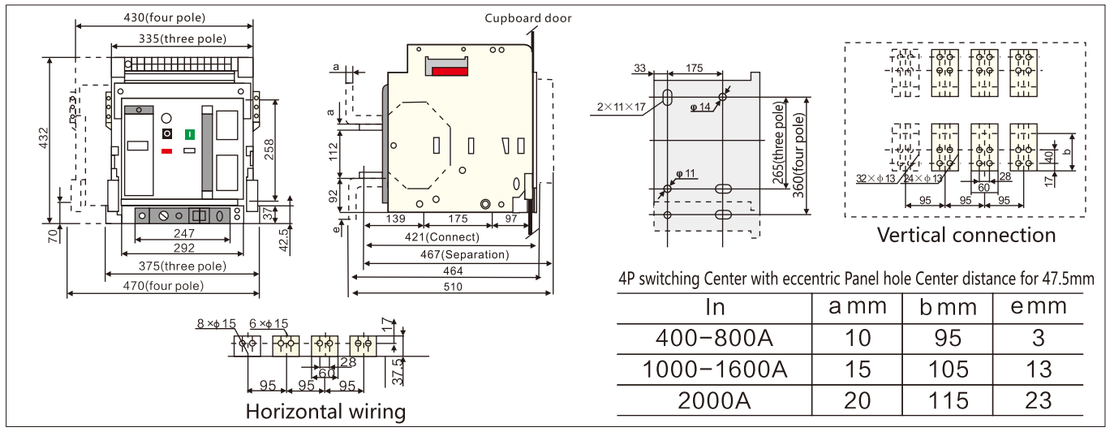

4P switching Center with eccentric Panel hole Center distance for 47.5mm

In	a mm	b mm	e mm
400-800A	10	95	3
1000-1600A	15	105	13
2000A	20	115	23

8.4 installation drawer sizes and dimensions (GTW1-3200/3, 3200/4)

4P switching Center with eccentric Panel hole Center distance for 60mm

In	amm	bmm	cmm	dmm	emm
2000A,2500A	20	115	482	528	23
2900A,3200A	30	135	502	548	43

8.5 drawer type circuit breaker mounting sizes and dimensions (GTW1-4000)

8.6 Drawer circuit breaker Installation dimensions and Overall dimensions(GTW1-4000/4)

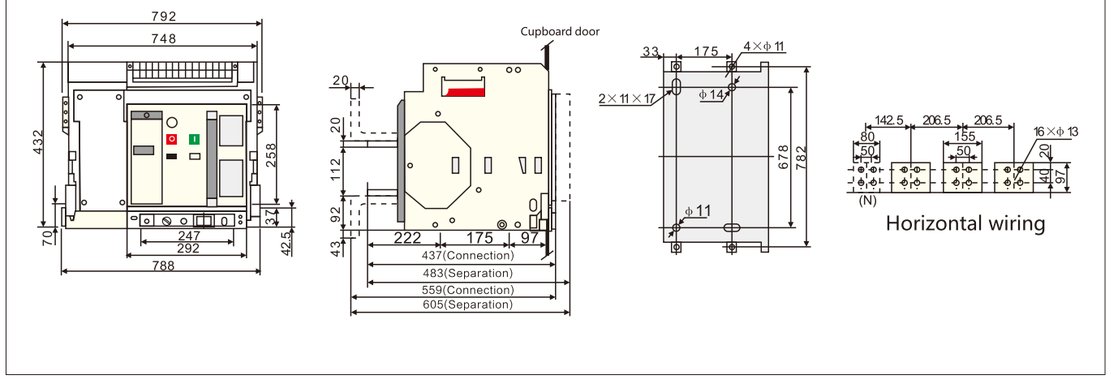

8.7 Drawer circuit breaker Installation dimensions and Overall dimensions(GTW1-6300、6300/4 In：4000、5000)

Inm	Busbar thickness amm
4000A	20
5000A	30

8.8 Drawer circuit breaker Installation dimensions and Overall dimensions(GTW1-6300 In：6300)

8.9 Panel bulkhead mounting dimensions figure

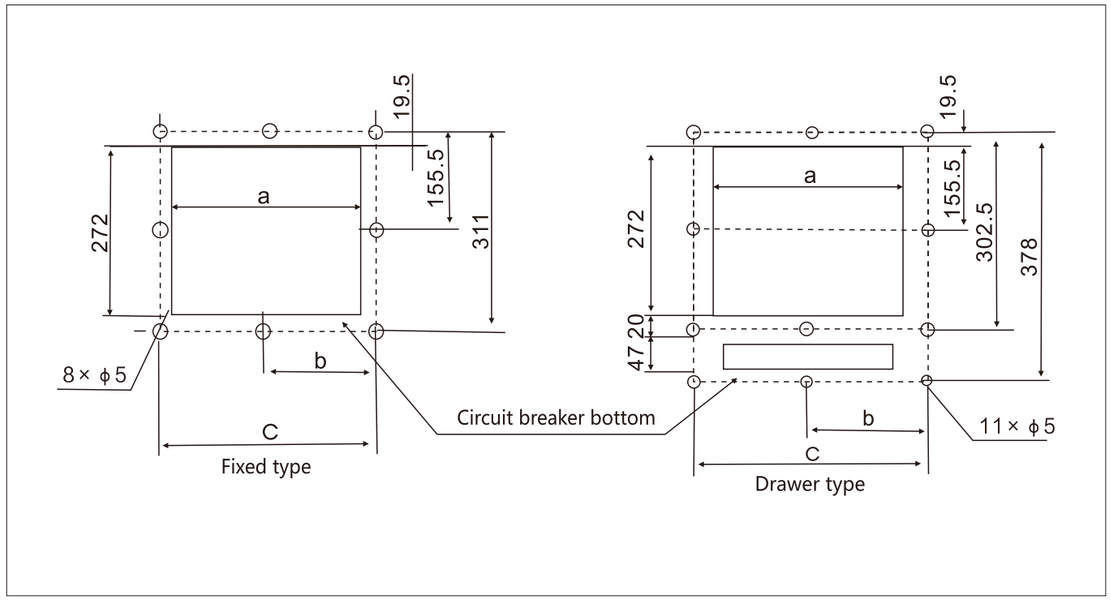

Inm	a mm	b mm	c mm
2000 Series	306	172.5	345
3200 Series	366	202.5	405
6300 Series			

9, specifications, the number of users connected with the copper bars shown in the table below

Rated current	An external bar.	Each pole number	Rated current	An external bar.	Each pole number
630A	40X5	2	3200A	120X10	3
800A	50X5	2	3600A	120X10	4
1000A	60X5	2	4000A	120X10	4
1250A	80X5	2	5000A	120X10	5
1600A	100X5	2	6000A	120X10	6
2000A	100X5	3			

10. trouble shooting

Failure phenomenon		Fault cause	Processing method
Circuit breaker cannot be stored	Circuit breakers cannot be fed manually	A, operating handle latch spring	Will spring back to its original location, or contact the manufacturer
		B, energy storage mechanism failure	Storage of mechanical failure, and contact manufacturers
	Circuit breaker not an electric energy storage	A, stored energy motor no power or is corrupted	Check that the motor is receiving power, if damaged replace motor
		B, small motor-operated control voltage	Check control voltage
		C, energy storage mechanism failure	Storage of mechanical failure, and contact manufacturers
Circuit breaker not closing	Undervoltage tripping device fails	A, under voltage release to power or voltage below 85%	Check whether the power, and then check the connection terminal up and down the cutter contact is good, if the voltage is too low to adjust the operating voltage
		B, undervoltage tripping coil or delay control part	Repair or replace undervoltage tripping device
		If CV is a suction undervoltage tripping device, a reaction spring fracture mechanism on the axis or shift	Service counter force spring plate
	Release solenoid failure	A, release energy solenoid control supply voltage is less than 85%	Adjust voltage
		BV release energy electromagnet damage	Contact with manufacturing plant, adjust release energy electromagnet
		C, energy release screw tripping electromagnet	The screw adjustment, so that the length of the top fastening device for plastic parts can.
	The shunt trip release screws are too long for the tripping shaft top dead		The screw short, top dead axle release release
	Works with drawer is not in place		Check the circuit breaker should be in test or connection position
	Intelligent controller for tripping killed by a plastic body release plastic parts		The intelligent controller will improve or with a file to two pieces of plastic joint part rasper
	Operation fault	A, release electromagnet following plastic parts on the body shifts	The release of the release of the electromagnet, the plastic parts reset
		B, the internal fault	Contact manufacturer for maintenance
	If it is a mechanical chain switches, connections do not release shaft lock or release status		Adjust the position of mechanical interlocking
			Current overload the trip switch or other reasons, the intelligent controller of the reset button to pop up, you must first reset button was pressed into the circuit breaker can be closing
Circuit breakers cannot be disconnected	Cannot disconnect	A, operating mechanism fault	Check operation, if you are stuck please contact the manufacturer
		B, tripping on the half shaft adjusting screw is not adjusted in place	Adjust the adjustment screw location
	Cannot disconnect electric	A, the shunt tripping device is not energized or power supply voltage is less than 85%	Power on or adjust the operating voltage
		BV shunt Tuotuo buckle device damage	Contact with factory replacement controller
		C, operating mechanism fault	Contact with the manufacturer, the replacement of the shunt tripping device
	Switch short circuit or over	A, controller damage	Check operation, if jam occurs, please contact manufacturers
		B, transformer signal line damage or contact with the controller is not good, no signal input controller	Repair or replacement of transformer
		CV stuck inside, can not make the trip signal intelligent controller mechanism tripping	Please contact the manufacturer
Drawer type circuit breaker in separation	The circuit breaker is not fully achieved "separating position" after the drawer is rolled out and the handle is pulled out.		Will contact suppliers
			The wave out, you can pull the breaker
	There are foreign bodies into the drawer, causes rocking in and out of institutions his teeth stuck fault breaker body hook in a drawer on the hinge plate		Check to exclude foreign body, if still cannot take, and contact the manufacturer
Drawer type circuit breaker	There are foreign bodies into the drawer, resulting in rocking in and out of institutions his teeth stuck		Check to exclude foreign body, if still cannot take, and contact the manufacturer
	Circuit Breakers rated current ontology drawers do not match (that is, line thickness)		Check circuit breaker body Busbar Busbar thickness thickness and drawers are the same
	Circuit breaker within the ontology is not fully inserted into the drawer, and forcibly shake		All circuit breaker body shake it again
	Upper and lower terminal die		Terminal block parts
Nothing displayed on the controller	Intelligent controller not connected to voltage		Working voltage
	Intelligent controller for internal faults		Contact with the factory
Controller instructions	Intelligent controller for internal faults		Contact with the factory
	External sources of strong electromagnetic interference		Clear external electromagnetic interference

11. the installation

1. before installation check the circuit breaker specifications meet the requirements.
2. before installation with a 500V Megger insulation resistance check circuit breaker, at ambient temperature of 20 ± 5 degrees centigrade and relative humidity should be not less than 50%~70% IOMO, or drying, insulation resistance meets the requirements before use.
3. circuit breaker install circuit breaker should be in vertical with M10 screw fastening. Drawer type circuit breakers should take a breaker that will fasten the drawer after circuit breaker roll back into the drawer.
4. installation of reliable protective earth circuit breaker, is located in a significant grounding tags fixed circuit breaker should be in strict compliance with the security zone.
5. circuit-breakers after the installation is completed, and in accordance with the relevant wiring diagram wiring, before the circuit is powered up (drawer type circuit breaker reset the "pilot" position), the following test shall be performed.
5.1 check for undervoltage tripping, shunt trip and release solenoids, electric energy storage mechanism and plug in the power supply of the rated voltage is consistent with, and turned on the secondary circuit (undervoltage tripping device must be powered on, circuit breaker to operate).
5.2 check whether smart reset button Reset, only the reset button placed in the reset position, circuit breakers can be closed.
5.3 the handle moving up and down on the Panel seven shows after "energy storage" and hear "clicking" sound, that is, storage end, press the "I" button or release electromagnet power, reliable circuit breaker closed, move handle to storage again.
5.4 using motor operation can, in the motor power motor power to the panel display "energy storage", and "clicking" sound, storage end motor shuts off, press the "I" button or release electromagnet power, reliable circuit breaker closed, as well as motor power storage can prepare for the next closed.
5.5 after the circuit-breaker closed, with undervoltage tripping, shunt release, on the Panel "0" button or controller shall make the breaker tripping test button.

12. intelligent controller

1. controller tuning pressing the smart controller "setting" button, and display ILC1-ILC2-Ir4-Ir1-t1-Ir2-t2-Ir3 setting data, such as the factory setting of the data does not meet user needs can be reset according to the following requirements. Controller long delay current whole set, by "clear lamp" key Hou, by "set" key, until long delay current state indicates lamp bright, displayed long delay factory current whole set value, according to need can in (0.4~1.0) In range within whole set, by "+" key can makes current increases or reduced, each by once to <2% interval increases or decreases until close need of current weizhi, whole set finished, by once "storage can" key, storage indicates lamp bright once and out, said long delay current whole set value has storage end, original whole set value automatically disappeared.
Controller long delay time whole set, long delay current whole set end Hou, again by once "set" key, long delay Shi time state indicates lamp bright, displayed long delay Shi time factory whole set value (1.5Ir, and action time whole set value), by "+" or key, time can increased can reduced, each by once time increased or reduced 1 time times, until need of time weizhi. Setting is completed, press the "storage" storage indicator again and went out to indicate a long delay time set end, original setting automatically disappears. Short delay, and instantaneous v load monitoring, grounding protection action value whole set and action time whole set method and long delay same, for these protection characteristics whole timing, must by moving "set" key, makes its State led of location and whole set parameter consistent, grounding protection time whole set value in "OFF" location said fault State spring alarm not off buckle; instant moving whole set in "OFF" location (is greater than 50KA for "OFF" location), said the protection canceled, off buckle device in whole set process in the, Once a fault signal automatic blocking feature, enter the fault State. Controller parameters of protection, must not cross set up. For reclosing ILc2 set value is less than the ILc1. Controller when the setting of all parameters, press once again the "clear light" key or power reset time, release is in the running state.
2. controller tests
Controller setting, in front of the circuit breaker is put into operation, the controller protection function can be checked:
2.1 circuit breaker roll to "test" position.
2.2 with the "set" button in order to view various features of the set value.
2.3 using "set", "+", "-", brings up a simulated test current, be careful not to store lock.
2.4 by "off buckle" or "not off buckle" key, by "off buckle" key Shi, test indicates lamp bright, corresponding of State indicates lamp flashing, by action time Hou, circuit breaker device disconnect, displayed action time, while fault led and off buckle device indicates lamp bright; by "not off buckle" key, process and by "off buckle" key same, but circuit breaker device constantly open, off buckle led not bright.
2.5 overload test, press the "set" button to delay State, view the overload setting value, and then to other current status, press the "+", key, 1.3Ir1 the current to current, press the "test" key to enter the overload test State, the controller according to the law of inverse-time delay and indicates faults and test status. Other characteristics similar to, after the test, press the "clear light" to enter the normal operating state, must be accompanied by a mechanical "reset" closed circuit breaker.
3. controller use rules
Controller tuning, check the 1min without pressing, the automatic key enters the running state, but if a failure occurs, are automatically blocked key function, enter the fault State. Intelligent controller with heat and memory function, power after the test, you must overload energy release after the end of, the next test, otherwise the operating time will be reduced.
3.1 setting check – controller "clear light", after trouble-free case, press the "set" button, the cycle indicating various status and set that corresponds to the current and time. Check is complete, click the "clear light" key, 1min automatically without pressing ENTER to normal working condition.

3.2 network operating current and voltage check – controller "clear light", after trouble-free continuous pressing "select" button, the Recycle value indicating the current of each phase and ground current, display the maximum phase current. Such as tripping device with voltage display module, the current show "select 1", voltage display press the "option 2", then cycle indicates that the line voltage, normal display maximum line voltage. Controller "clear light" after clicking "Troubleshooting" button displays the last fault status and fault currents, testing or fault tripping and press "select" key. Recycled indicating testing or fault currents or time values. State memory.
3.3 reduction – in the case of auxiliary power breakers before closing you must first press the controller "clear light" button, the controller enters the normal state, then click on institution the "reset" button, close circuit breaker.
3.4 Control Panel structure

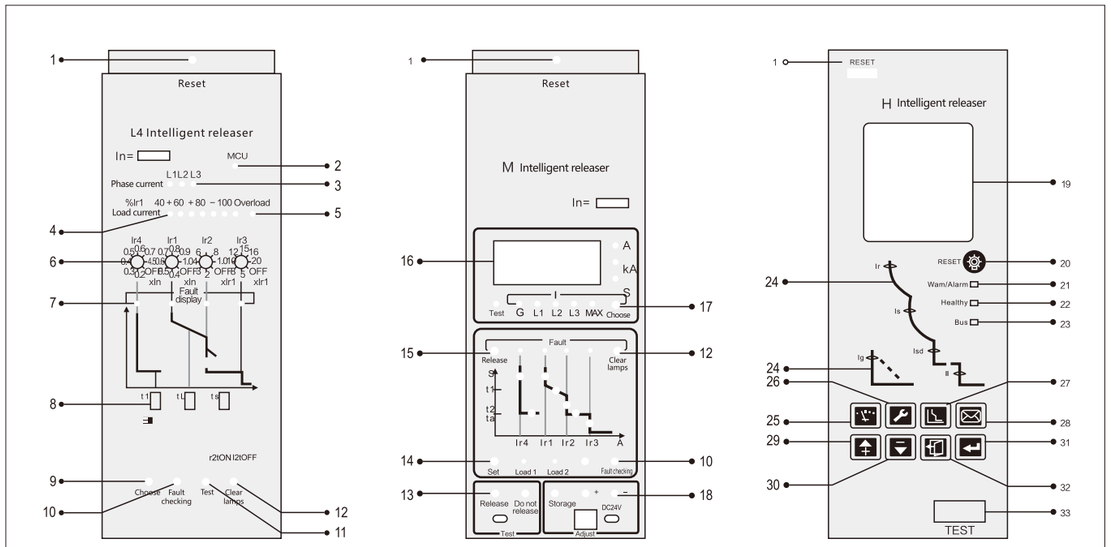

L4 type breaker panel | M type breaker panel (without voltage display) | H type breaker panel

1. "the reset button" in: circuit breaker faults, test and release the button and then press, to again close circuit breaker.
2. "the MGU" led: constant when the microcontroller (MCU) works fine.
3. "current" LEDs: L1, L2, L3 phase current current value is displayed when the largest one.
4 "load currents of light" led: displays the percentage of load current and the value of IM.
5. the "overload" led: lights when load current is over long delay protection overload currents, overload long delay start delay start delay or alarm.
6. "the Ir4," "Ir1", the "Ir2", "Ir3": ground, long time, instantaneous, short delay coding switches.
7. "fault" light: indicates that the fault type.
8. the "tG", "tL", "tS": long delay, overload, short circuit earthing fault delay time.
9. the "select" button: L1, L2, L3 phase current.
10. "Troubleshooting" button: press this key after fault tripping circuit breaker, to indicate the tripping cause of failure, with memory after a power failure.
11. the "test" key: pressing this key line of instantaneous tripping test, resulting in instantaneous tripping ed.
12. the "clear light" key: release set, test, failure, and then press some key to reset the breaker, and return to the normal state.
13. "release" and "release" key: test function.
14. the "set" button: check or set various protection features or current time, pressing this key cycles indicate status.
15. "LED" illuminated: can indicate a variety of State and category.
16. "the current and time display": displays the current time value.
17. the "select" button: normal operation cycle shows the phase current, fault or fault or fault check the status to cycle through the time value.
18. "storage", "+" and "-" keys: setting current time or use.
19.LCD interface not displaying.
20. the fault and alarm reset button.
21. "fault/alarm" LED: normal working hours, LED is not lit, when fault tripping, the red LED will blink fast, bright red LED constant in case of alarm.

22. the "normal" LED as long as ST40-3 powered on and working normally, green LED always blink.
23. Communications led, communication status indicator are as follows: Profibus, Huang-free communication, and communication and constant light. Modbus, Huang-free communication, and flashes when communications. Device Net, no blinking communication, communication and constant light.
24. the curve LED: curves hide the red LED light. Fault trip when the LED light is blinking indicates the fault type; protected parameter set, LED constant light indicates the current setting of the project.
25. measurements: key 1, switch to the measurement of default theme menu (under the password input screen for "down" key).
26. set: function keys 2, switch to the topic menu parameter setting (in the password input screen for "right").
27. protection: function key 3, the switching to parameter set the theme menu.
28. information: key 4, switching to history and maintaining the theme menu.
29. down: level up menu currently in use or change the selected parameter.
30. down: move down the menu currently in use, or the down arrow to change the selected parameter.
31. exit: exit the current level used by access to the previous menu or cancel the current parameters of the selected.
32. option: go to next menu point to the current project, or the currently selected parameters, storage changes.
33. test port: front panel bottom has a 16 pin test port insert a plug-type portable power box or unit.

13. accessories

1. under-voltage tripping device



- Undervoltage release if it is not being powered, electric or manual the circuit-breaker cannot be closed.
- Undervoltage release is divided into instant action and delay action in two ways.
- Undervoltage delay release time 0-7 seconds optional is not adjustable.
- the ½ delay time, when the power voltage is restored to 85%Ue above, circuit breaker disconnect.
- Operating characteristics.

Rated operating voltage Ue (v)	AC230 AC400
Tripping voltage	(0.35~0.7)Ue
Reliable switching voltage	(0.85~1.1)Ue
Reliable out of gate voltage	≤0.35Ue
Power consumption	20VA

2. shunt tripping device

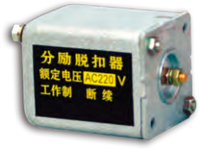

- Shunt power breaker instantaneous disconnect, remote operation.
- Operating characteristics.

Rated operating voltage Ue (v)	DC230 DC400
Tripping voltage	
Power consumption	250W
Break-time	

3. the closing electromagnet

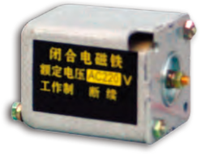

- Motor storage after the closing electromagnet power can make the operator can instantly spring storage, circuit breaker closed quickly.
- Operating characteristics

Rated operating voltage Ue (v)	AC230 AC400	DC230 DC400
Tripping voltage	(0.85~1.1)Us	
Power consumption	56VA	250W
Break-time	50±10(ms)	

4, auxiliary contacts



- Auxiliary contacts of a standard form for the conversion of 4 groups of contacts (2 normally open normally closed 2), special type for 6 Group contact (normally closed 3 normally open 3).
- Technical parameters

Rated voltage (v)		Rated thermal current Ith (a)	Rated capacity control
AC	230	10	300VA
	400	6	100VA
DC	220	0.5	60W

5, electric operator



- Motor energy and breaker automatic storage function, to ensure that the circuit breaker tripping could immediately after closing.
- Circuit breaker can also be manually fed.
- Operating characteristics

Rated control supply voltage Ue (v)	AC230 AC400	AC230 DC220
Tripping voltage	(0.85~1.1)Us	
Power consumption	250VA/380VA	200W
Storage time	<4s	
Operating frequency	A maximum of 3 times per minute	

6, bolts and gaskets



Installing cabinets on the room's door, play a role in sealing, protection class IP40 (protection class IP20 when circuit breakers installed separately).

7, phase interval plates



Installed on the terminal block and white, used to increase the circuit breaker insulating ability.

8, key lock



- Broken button of the circuit breaker can be locked in the down position, then, circuit breaker closing operation is not possible.
- After the user has rotated, factories provide a lock and a key.
- A circuit breaker equipped with independent lock and two keys of the same,
- Three circuit breakers equipped with three lock and two keys of the same same

Note: universal circuit breaker key interlock when you need to pull out the key, you must first press the off button, counter-clockwise turn the key and pull out the key.

9, transparent protection cover

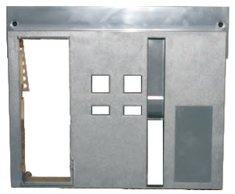

Installed in a small room on the door frame, protection class IP54. Apply to the drawer, fixed type circuit breaker and line with switch.

10, steel cables mechanical interlock

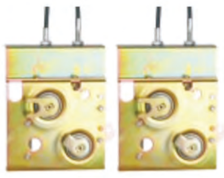

- As 2 horizontal or vertical three-pole or four-pole circuit breakers interlocking.
- Steel cables, when bending, should leave enough at the bend of the transition arc (generally greater than 120mm) to ensure the cables flexible movement.
- C. two mutually interlocked circuit breaker the maximum distance is 2m.
- Plug the drawer anti-misoperation device
- Only matches the rated current of the circuit breaker as shown signs for the body to be inserted in the drawer.
- Does not match the current rating cannot be inserted.



ZHEJIANG ZHEGUI ELECTRIC CO,. LTD.

Address: No.316 Weishiyi Road , Yueqing City,
Zhejiang Province, China
ProvinceTel: 0577-62657695/626577696
Email address:service@giantele.com
Website: www.giant-electric.com

Giantele®

VS1-12

VS1-12 series indoor high voltage vacuum circuit breaker

www.giant-electric.com

The meaning of the product model

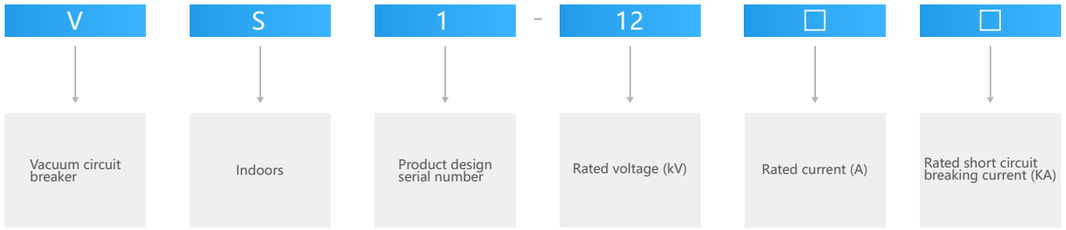

Overview

VS1-12 indoor high-voltage vacuum circuit breaker (hereinafter referred to as circuit breaker) is used for indoor switching equipment in 12KV power system, as the protection and control unit of power grid equipment, industrial and mining enterprises. Because of the special advantages of vacuum circuit breaker, it is especially suitable for frequent operation requiring rated working current, or multiple times to break the short circuit current.

The circuit breaker adopts the integrated design of the operating mechanism and the circuit breaker body, which can be used as a fixed installation unit or a special propulsion mechanism to form a handcart unit.

Product basis standard

GB/T1984-2014 AC high-voltage Circuit Breaker,

JB/T 3855-2008 High Voltage AC Vacuum Circuit Breaker,

DL/T 403-2000 "12kV-40.5kV High voltage vacuum Circuit breaker ordering Technical Conditions" standard requirements.

And comply with IEC 62271-100 requirements.

Environmental conditions of use

Normal service condition

- Ambient temperature
  Maximum temperature: +40 ° C
  Minimum temperature: -25 ° C
- Ambient humidity
  Daily mean relative humidity: ≤95%
  Monthly mean relative humidity: ≤ 90%
- Altitude: No more than 1000m
  The intensity of the earthquake was not more than 8 degrees
- The use place is free from dripping water, flammable and explosive danger, chemical corrosive gas and violent vibration.

Special service conditions

- For special use conditions, by the manufacturer and the user to negotiate, and reached a consensus, to provide special design and supply;
- Special conditions of use are:
  ① The altitude above 1000m;
  ②Places with condensation risk under high humidity or climate conditions with large humidity mutation.

Main specifications and technical parameters

NO.	Project	Unit	Numerical value		
1	Rated voltage	kV	12		
2	Rated short-time power frequency withstand voltage(1min)		42		
3	Rated lightning shock tolerance voltage (peak)		75		
4	Rated frequency	Hz	50		
5	Rated current	A	630 1250	630 1250 1600 2000 2500 3150	1250 1600 2000 2500 3150 4000
6	Rated short-circuit breaking current	kA	20/25	31.5	40
7	Rated short-time withstand current		20/25	31.5	40
8	Rated short circuit duration	S	4		
9	Rated peak tolerable current	kA	50/63	80	100
10	Rated short-circuit closing current		50/63	80	100
11	Secondary circuit power frequency withstand voltage (1min)	V	2000		
12	Rated single/back-to-back capacitor group breaking current	A	630/400(800/400 for 40kA)		
13	Rated capacitor bank turn-on inrush current	kA	12.5(Frequency not more than 100Hz)		
14	Switching time (rated voltage)	ms	≤50		
15	Closing time (rated voltage)		≤60		
16	Mechanical life	Time	20000		
17	Breaking times of rated current (electrical life)		20000		
18	Number of breaks of rated short circuit current		50(40kA≤30)		
19	Kinematic and static contacts allow wear accumulative thickness	mm	3		
20	Rated closing operating voltage	V	AC110/220 DC110/220		
21	Rated switching operating voltage				
22	Rated voltage of energy storage motor				
23	Rated power of energy storage motor	W	70		
24	Energy storage time	S	≤10		
25	Contact opening distance	mm	11±1		
26	Overstroke		3.5±0.5		
27	Contact closing bounce time	ms	≤2(40kA≤3)		
28	Three - phase switching and closing are different		≤2		
29	Average opening speed	m/s	1.1±0.2		
30	Average closing speed		0.6±0.2		
31	Main circuit resistance (fixed/hand)	μΩ	≤45/60(630A)≤40/55(1250A) ≤30/50(1600-2000A) ≤25/35(More than 2500A)		
32	Contact closing contact pressure	N	2000±200(20kA)2400±200(25kA) 3100±200(31.5kA)4250±250(40kA)		
33	Rated operation sequence		Opening -0.3s(18OS)-Opening and closing 180S-Opening and closing		

○ Product structure and working principle

● Main structure

The overall structure of the VS1-12 vacuum circuit breaker adopts the form of an operating mechanism and a front and rear arrangement of the arc extinguishing chamber. The vacuum arc extinguishing chamber is longitudinally installed in a tubular insulation cylinder, which is cast from epoxy resin using APG process, making it particularly resistant to creepage. This structural design greatly reduces the accumulation of dust on the surface of the arc extinguishing chamber. Not only can it prevent the vacuum interrupter from being damaged by external factors, but it can also ensure that even in humid, hot, and severely polluted environments, it can present a high resistance state to voltage.

Main circuit current path when circuit breaker is in closing position: (see Figure 2)
Upper outlet seat 27 through the upper support 26 fixed on the arc extinguishing chamber to the static contact in the vacuum arc extinguishing chamber, through the moving contact and its connected conductive clip, soft connection, to the lower support 30 to the lower outlet seat 31. The circuit breaker is equipped with a dust-proof insulation cover for each current level before delivery. In actual use, the circuit breaker does not need to be removed when the rated current is 1250A or below, and must be removed when the rated current is 1600A or above.

● Operating mechanism (see Figure 1, Figure 2)

The operating mechanism is a spring operating mechanism arranged in a plane, with manual energy storage and electric energy storage. The operating mechanism is placed in a box in front of the arc quenching chamber. The box is divided into five assembly Spaces by four middle partitions, which are respectively equipped with the energy storage part, transmission part, trip part and buffer part of the operating mechanism. VS1-12 vacuum circuit breaker integrates the arc extinguishing chamber and the operating mechanism into a unified whole, that is, adopts the integrated layout. This structure design can make the operating performance of the operating mechanism more consistent with the performance required by the opening and closing of the arc extinguishing chamber, reduce unnecessary intermediate transmission links, reduce loss and noise, and make the operating performance of VS1-12 circuit breaker more reliable. VS1-12 circuit breakers can be loaded into either hand - type switchgear or fixed switchgear.

● Energy storage

The energy required by circuit breaker closing is provided by closing spring energy storage. Energy storage can be done either by an external power-driven motor or manually using an energy storage handle.Energy storage operation: It is carried out by the energy storage motor 16 fixed on the frame, or the energy storage handle is inserted into the manual energy storage hole and shaken clockwise. Electric energy storage by the motor output shaft 15 drive sprocket drive system (14, 23, 18), manual energy storage through the worm gear, worm (11, 13) drive sprocket drive system. When the sprocket 23 rotates, the slider 4 on the pin 2 drive wheel 6 makes the energy storage shaft 7 rotate and energy storage is carried out by stretching the closing spring through the boom 5 and 21. When the energy storage position is reached, the limit rod 3 on the frame presses the slide block 4 to disconnect the energy storage shaft and the sprocket drive system, and the energy storage holding switch 9 holds the roller 8 to maintain the energy storage position. At the same time, the connecting plate on the energy storage shaft 24 drives the energy storage indicator 25 to turn over and show the "energy storage" mark and switch the auxiliary switch to cut off the power supply of the energy storage motor. At this time, the circuit breaker is in the state of closing preparation.

● Closing

During the closing operation, no matter pressing the "closing" button by hand or operating far away to make the closing electromagnet move, the energy storage holding shaft can rotate. When the roller 8 is released, the closing spring shrinks and the energy storage shaft 7 and the CAM 22 on the shaft rotate through the lever 5 and 21. The CAM drives the connecting rod mechanism (39, 38, 37, make the switch 936, 34) to drive the insulating tie rod 33 and the moving contact into the closing position, and compreses the contact spring 32 to maintain the contact pressure required by the contact. After the closing operation is completed, the closing hold switch 38 and half shaft 41 remain in the closing position. At the same time, the energy storage indicator and the energy storage auxiliary switch reset the motor power supply circuit. If the external power supply is connected, the energy storage state will be entered again. The 44-bit dynamic/partial indicator of the connecting board will show the "close" mark, and the driving rod will pull the main auxiliary switch to switch.

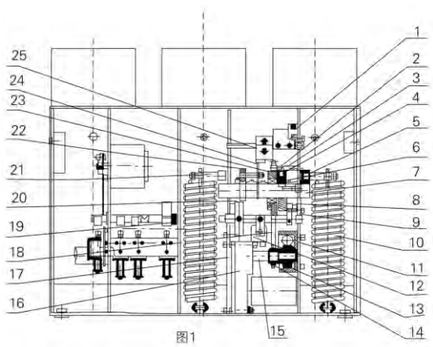

图1

1 Microswitch for energy storage in place switching
2 pins
3 Limit lever
4 Sliders
5 crank arm
6 Energy storage transmission wheel
7 Energy storage shaft
8 rollers
9 Energy storage retention switch
10 Closing spring
11 Manual energy storage worm
12 closing electromagnet
13 Manual energy storage transmission worm gear
14 Motor drive sprocket
15 Motor output shaft
16 Energy storage motor
17 Interlocking transmission bending plate
18 Transmission chain
19 Closing and holding axis
20 locking electromagnet
21 crank arm
22 cam
23 Energy storage transmission sprocket
24 connecting boards
25 Energy storage indicator board

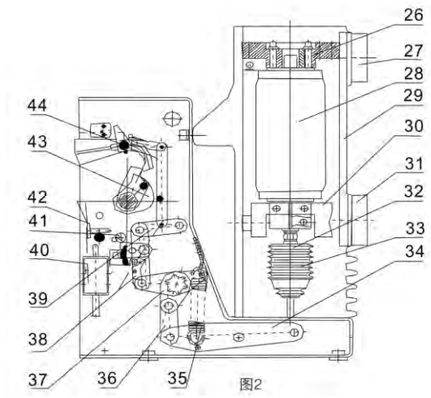

图2

26 Upper bracket
27 Upper outlet socket
28 Vacuum arc extinguishing chamber
29 Insulating cylinder
30 lower bracket
31 Lower outlet socket
32 contact pressure spring
33 insulated pull rod
34 Transmission crank arm
35 opening spring
36 Transmission connecting plate
37 Spindle transmission crank arm
38 closing and holding switch
39 connecting boards
40 opening electromagnet
41 Half shaft
42 Manual opening top rod
43 cam
44 Opening and closing indicator board connection board

Note: When the circuit breaker is already in the closing state or the locking device is selected without unlocking the locking device and the hand-driven circuit breaker is in the process of pushing out, the closing operation cannot be carried out.

● Switch off

You can either press the "opening" button or reliably connect the external power supply to activate the opening and tripping electromagnet or the overcurrent tripping electromagnet to release the closing holding switch 38 and the half shaft 41 to achieve opening operation. The energy stored by the contact spring and the opening spring 35 separates the dynamic and static contacts of the arc extinguishing chamber 28. In the later stage of the opening process, the hydraulic buffer absorbs the remaining energy during the opening process and limits the opening position. Pull the connecting rod 44 to display the "open" mark on the closing/opening indicator, and simultaneously pull the counter to achieve counter counting. The transmission connecting rod pulls the main auxiliary switch to switch.

● Anti-error interlocking

The circuit breaker can provide perfect anti-misoperation function. (See Figure 3 and Figure 4)

- After the closing operation of the circuit breaker is completed, the closing interlocking bending plate 1 runs downwards and catches the closing bending plate 2. When the circuit breaker is not opened, it cannot be closed again.
- After the circuit breaker is closed, if the closing electrical signal is not removed in a timely manner, the internal anti tripping control circuit of the circuit breaker will cut off the closing circuit to prevent multiple reclosures. (Optional)
- When the handcart circuit breaker is not in the test position or working position, the interlocking bending plate 3 fastens the pin 4 on the closing bending plate 2. Simultaneously cut off the closing circuit to prevent the circuit breaker from entering the load zone in the closed state.
- After the handcart circuit breaker is closed in the working or experimental position, the locking plate 6 of the pushing mechanism is pressed by the pin shaft 5. The handcart will not be able to move, preventing it from pushing or pulling out of the load zone in the closed state. (Figure 4)
  If electrical closing lock is selected, prevent closing operation without unlocking the locking position..

Note: The power of the closing and locking device is 5.5W, and the working voltage range is 0.65~1.1 times the rated voltage.

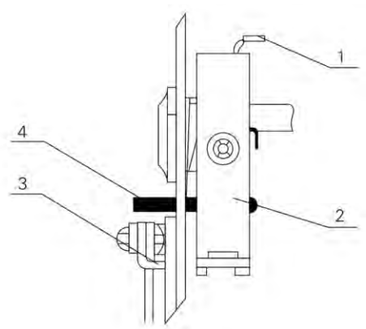

图3

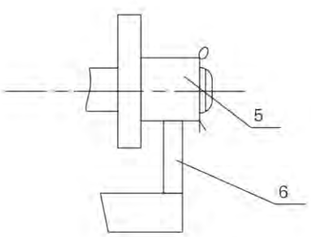

图4

○ Outline dimensional drawing

● **Hand car VS1-12 (650) External dimensions:**

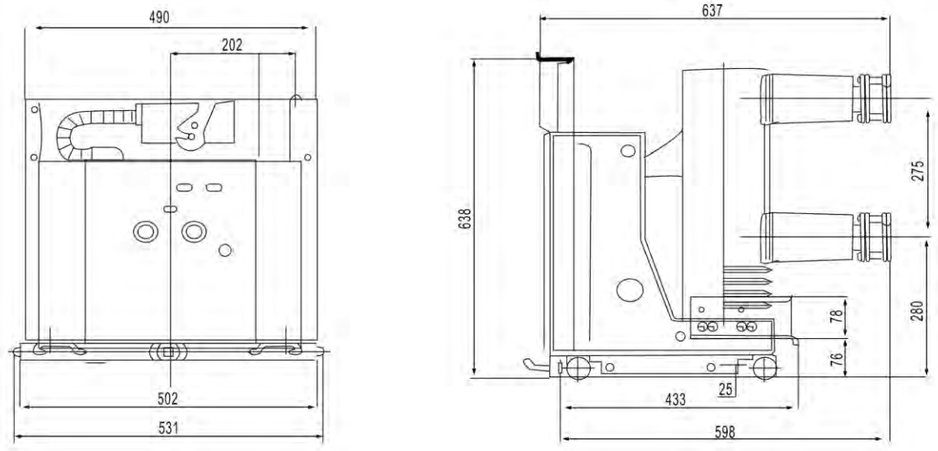

Rated current (A)	630	1250
Rated short circuit breaking current (KA)	20、25、31.5	20、25、31.5、40
Fit static contact size (mm)	Φ35	Φ49

● **The primary phase spacing is 150mm and the cabinet width is 650mm.**

Hand car VS1-12 (800) Dimensions:

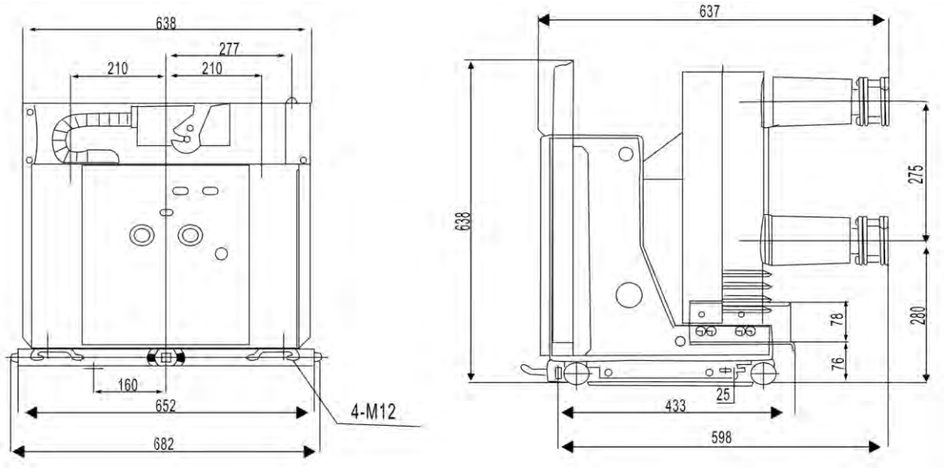

Rated current (A)	630	1250	1600
Rated short circuit breaking current (KA)	20、25、31.5	20、25、31.5、40	31.5
Fit static contact size (mm)	Φ35	Φ49	Φ55

The primary phase spacing is 210mm and the cabinet width is 800mm.

● **Hand car VS1-12 (1000) dimensions:**

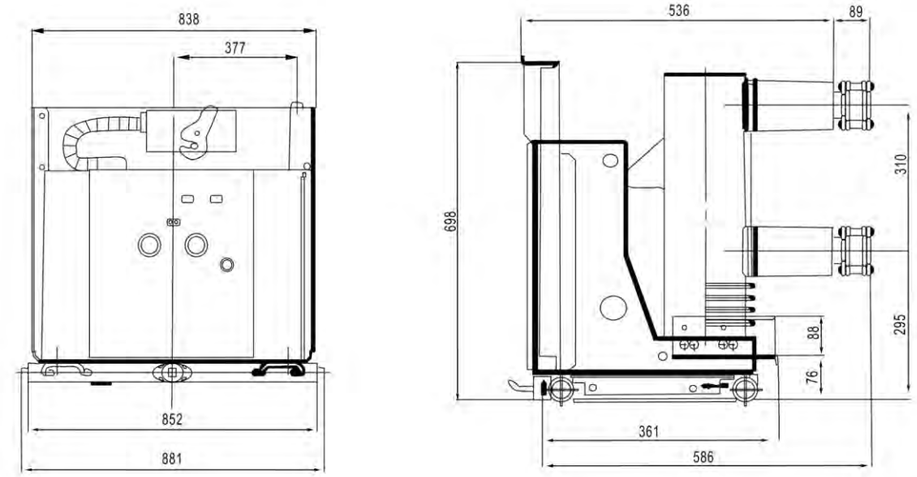

Rated current (A)	1600	2000	2500	3150	4000*
Rated short circuit breaking current (KA)	31.5、40	31.5、40	31.5、40	31.5、40	40
Fit static contact size (mm)	Φ79		Φ109		

● **The primary phase spacing is 275mm and the cabinet width is 1000mm. *4000A requires strong air cooling.**

Fixed VS1-12 (800) External dimensions:

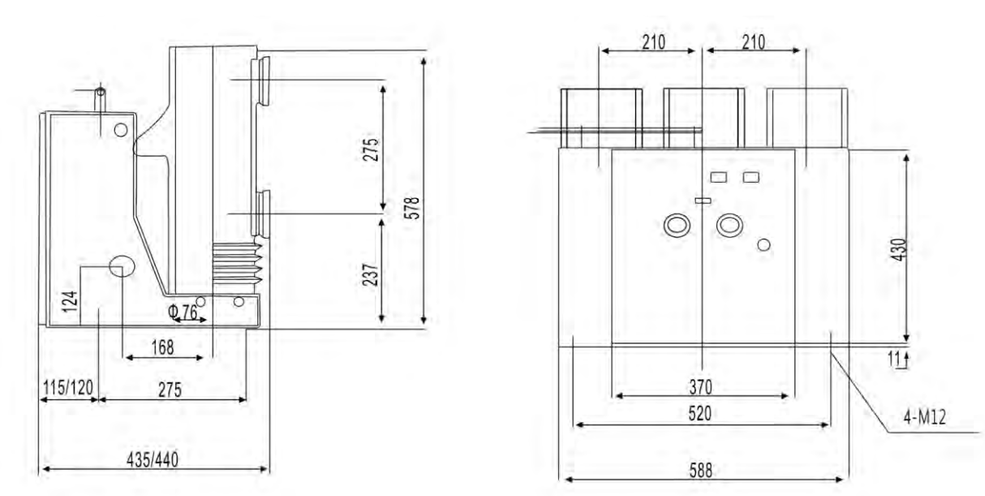

Rated current (A)	630	1250	1600
Rated short circuit breaking current (KA)	20、25、31.5	20、25、31.5、40	31.5

The primary phase spacing is 210mm and the cabinet width is 800mm.

- **Fixed VS1-12 (1000) External dimensions:**

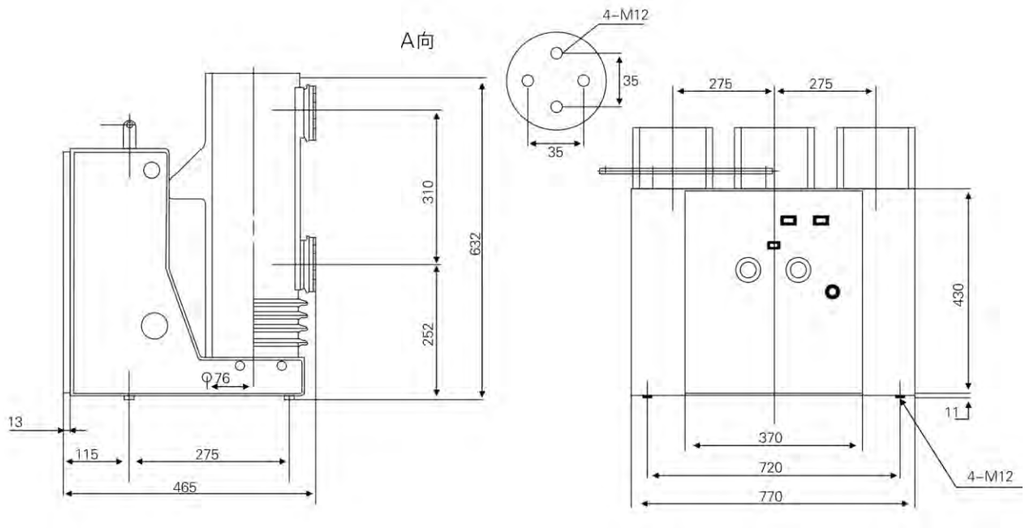

Rated current (A)	1600	2000	2500	3150	4000*
Rated short circuit breaking current (KA)	31.5、40				40

The primary phase spacing is 275mm and the cabinet width is 1000mm. *4000A requires strong air cooling.

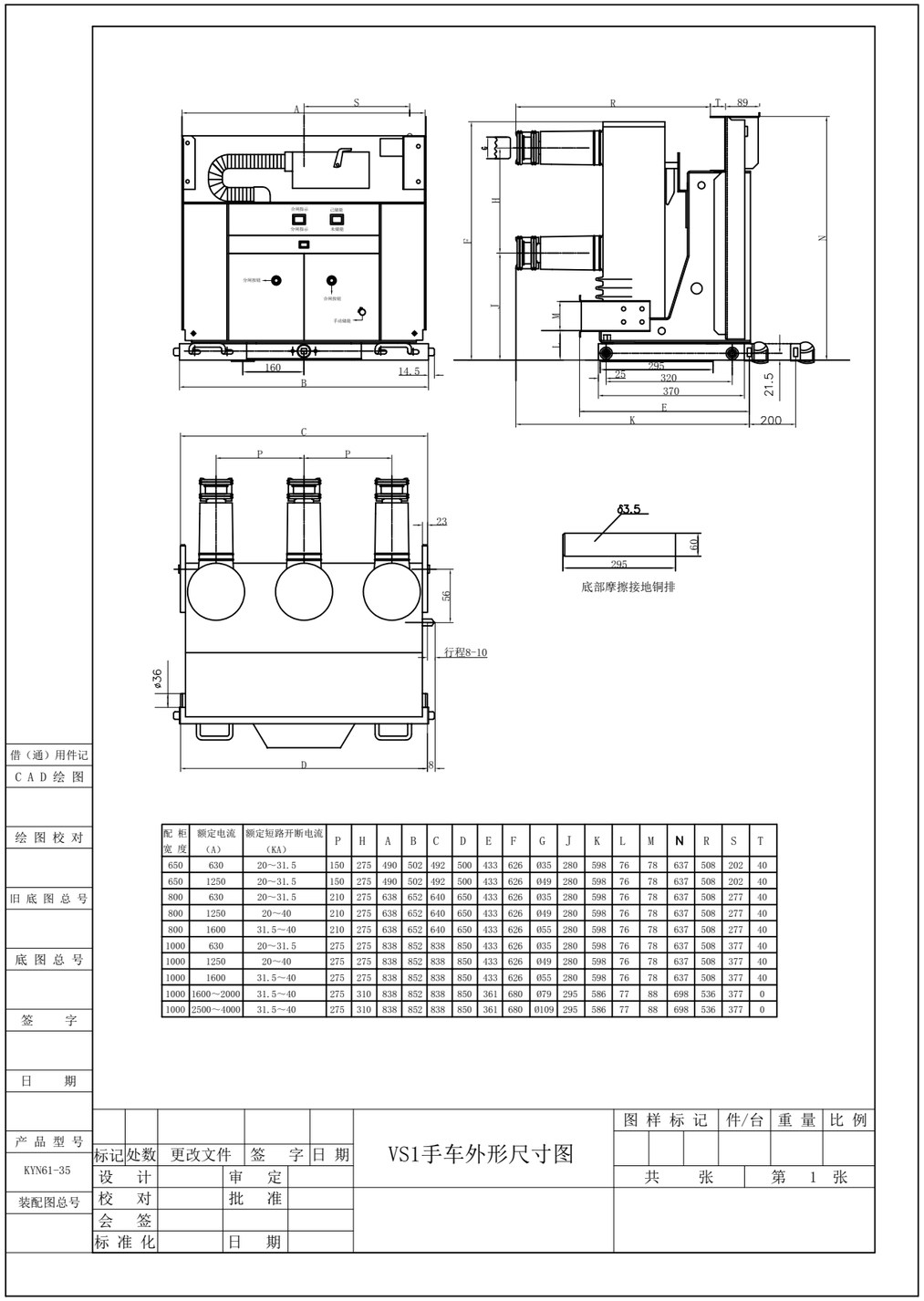

配柜宽度	额定电流(A)	额定短路开断电流(KA)	P	H	A	B	C	D	E	F	G	J	K	L	M	N	R	S	T
650	630	20~31.5	150	275	490	502	492	500	433	626	Ø35	280	598	76	78	637	508	202	40
650	1250	20~31.5	150	275	490	502	492	500	433	626	Ø49	280	598	76	78	637	508	202	40
800	630	20~31.5	210	275	638	652	640	650	433	626	Ø35	280	598	76	78	637	508	277	40
800	1250	20~40	210	275	638	652	640	650	433	626	Ø49	280	598	76	78	637	508	277	40
800	1600	31.5~40	210	275	638	652	640	650	433	626	Ø55	280	598	76	78	637	508	277	40
1000	630	20~31.5	275	275	838	852	838	850	433	626	Ø35	280	598	76	78	637	508	377	40
1000	1250	20~40	275	275	838	852	838	850	433	626	Ø49	280	598	76	78	637	508	377	40
1000	1600	31.5~40	275	275	838	852	838	850	433	626	Ø55	280	598	76	78	637	508	377	40
1000	1600~2000	31.5~40	275	310	838	852	838	850	361	680	Ø79	295	586	77	88	698	536	377	0
1000	2500~4000	31.5~40	275	310	838	852	838	850	361	680	Ø109	295	586	77	88	698	536	377	0

借（通）用件记								图样标记	件/台	重量	比例
C A D 绘 图											
绘 图 校 对											
旧 底 图 总 号											
底 图 总 号											
签 字											
日 期											
产 品 型 号	标记	处数	更改文件	签 字	日 期	VS1手车外形尺寸图					
KYN61-35	设 计			审 定							
装配图总号	校 对			批 准							
	会 签										
	标 准 化			日 期							

VS1-12

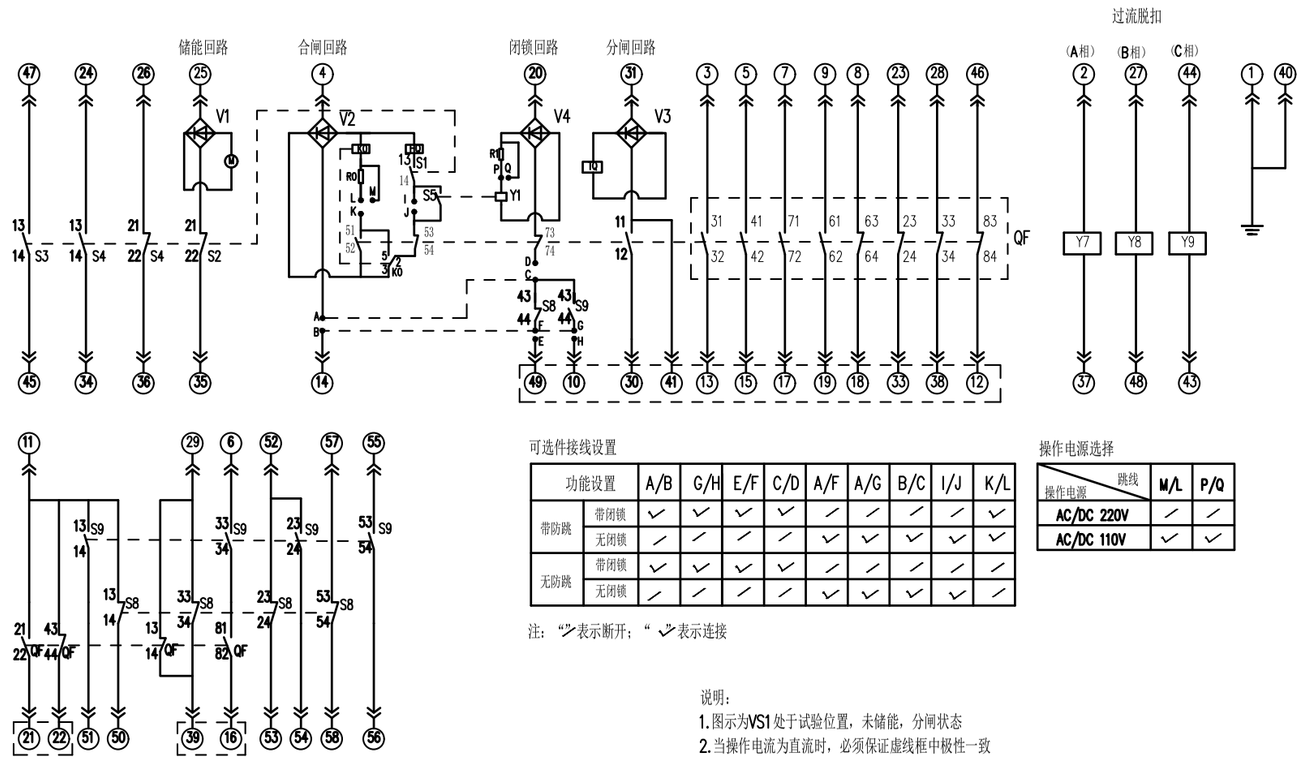

可选件接线设置

功能设置		A/B	G/H	E/F	C/D	A/F	A/G	B/C	I/J	K/L
带防跳	带闭锁	✓	✓	✓	✓	／	／	／	／	✓
	无闭锁	／	／	／	／	✓	✓	✓	✓	✓
无防跳	带闭锁	✓	✓	✓	✓	／	／	／	／	／
	无闭锁	／	／	／	／	✓	✓	✓	✓	／

注：“✓”表示断开；“／”表示连接

操作电源选择

操作电源 \ 跳线	M/L	P/Q
AC/DC 220V	／	／
AC/DC 110V	✓	✓

说明：
1. 图示为VS1处于试验位置，未储能，分闸状态
2. 当操作电流为直流时，必须保证虚线框中极性一致

S5：闭锁电磁铁微动开关	HQ：合闸线圈	K0：防跳继电器（可选）
S1-S4：微动开关（储能后切换）	TQ：分闸线圈	Y1：闭锁线圈（可选）
QF：辅助开关（分合操作时切换）	M：储能电机	V1-V4桥式整流器（可选）
a/b;i/j;k/l;m/l;p/q：跳线	R0-R1：电阻	Y7-Y9：过电流脱扣线圈（可选）
S8：试验位置辅助开关	S9：工作位置辅助开关	

标记	处数	分区	更改文件号	签名	日期
设计			标准化		
校对					
审核					
工艺			批准		

VS1-12手车二次原理图
(8K8B)

用户	
合同编号	
图样标记	数量 比例

通(借)用件登记
CAXA制图
电脑文件名
旧底图总号
底图总号
签字
日期

VS1-12

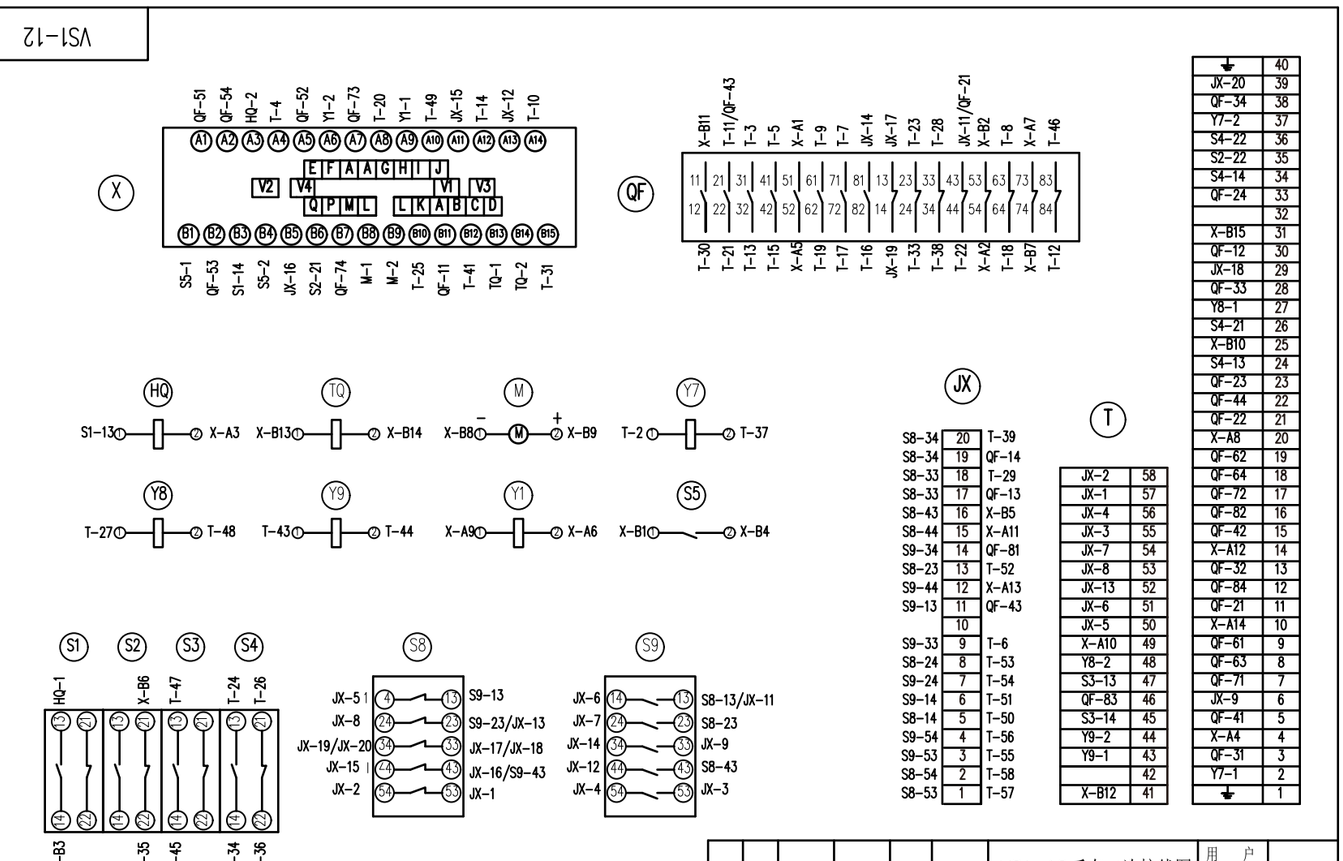

标记	处数	分区	更改文件号	签名	日期
设计			标准化		
校对					
审核					
工艺			批准		

VS1-12手车二次接线图
(8K8B)

用户	
合同编号	
图样标记	数量 比例

通(借)用件登记
CAXA制图
电脑文件名
旧底图总号
底图总号
签字
日期

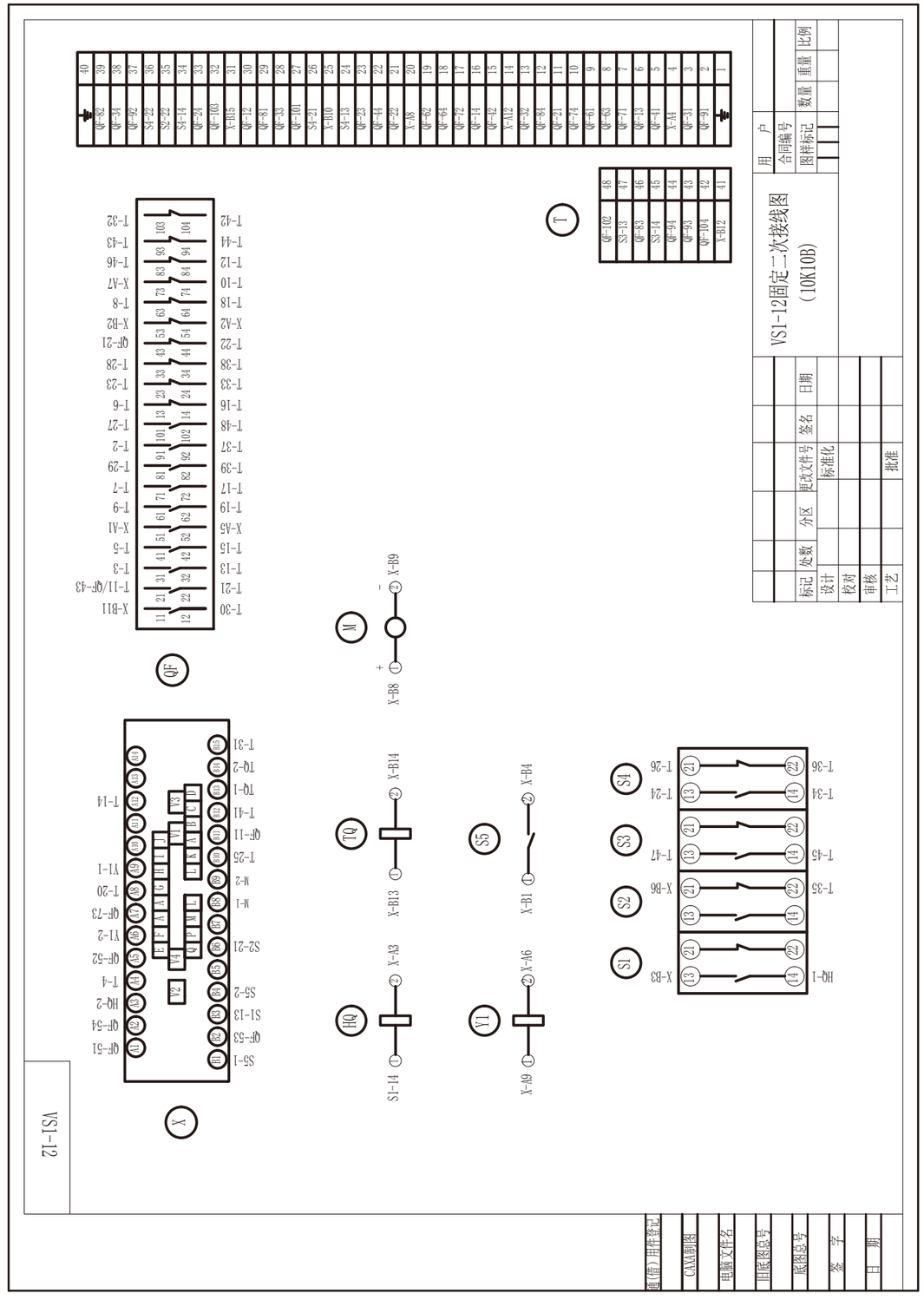
VS1-12
VS1-12固定二次接线图
（10K10B）
用户
合同编号
图样标记
数量
重量
比例
标记 处数 分区 更改文件号 签名 日期
设计
校对
审核
工艺
批准
标准化
CAXA制图
电脑文件名
旧底图总号
底图总号
签字
日期
T
QF
M
X
QF1
QF2
QF3
QF4
T1
T2
T3
T4
S1
S2
S3
S4
S5
V1
HQ
TQ
X-B9
X-B8
X-B14
X-B13
X-A3
X-B4
X-B1
X-A9
X-A6
X-B3
X-B6
X-B11
T-11/QF-43
HQ-1

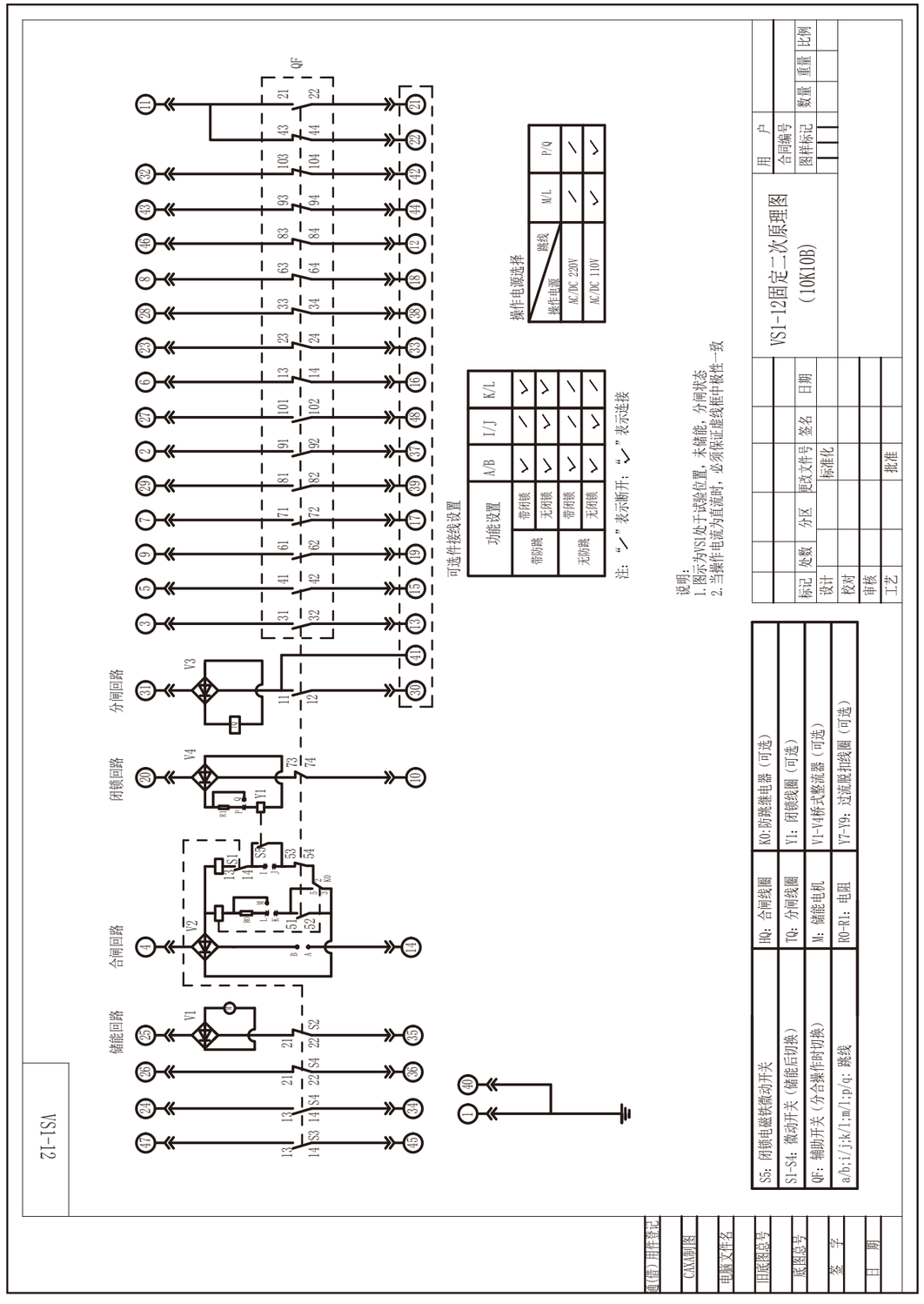
VS1-12
VS1-12固定二次原理图
（10K10B）
用户
合同编号
图样标记
数量
重量
比例
标记 处数 分区 更改文件号 签名 日期
设计
校对
审核
工艺
批准
标准化
CAXA制图
电脑文件名
旧底图总号
底图总号
签字
日期
QF
储能回路
合闸回路
闭锁回路
分闸回路
V1
V2
V3
V4
S1
S2
S3
S4
S5
M
HQ
TQ
YO
YC
说明：
1.图示为VS1处于试验位置，未储能，分闸状态
2.当操作电流为直流时，必须保证虚线框中极性一致
操作电源选择
跳线
操作电源
M/L
P/Q
AC/DC 220V
AC/DC 110V
可选件接线设置
功能设置
A/B
I/J
K/L
带防跳
无防跳
带闭锁
无闭锁
注：“／”表示断开；“√”表示连接
HQ：合闸线圈
TQ：分闸线圈
M：储能电机
R0-R1：电阻
KO:防跳继电器（可选）
Y1：闭锁线圈（可选）
V1-V4:桥式整流器（可选）
Y7-Y9：过流脱扣线圈（可选）
S5：闭锁电磁铁微动开关
S1-S4：微动开关（储能后切换）
QF：辅助开关（分合操作时切换）
a/b;i/j;k/l;m/l;p/q：跳线

VS1-12

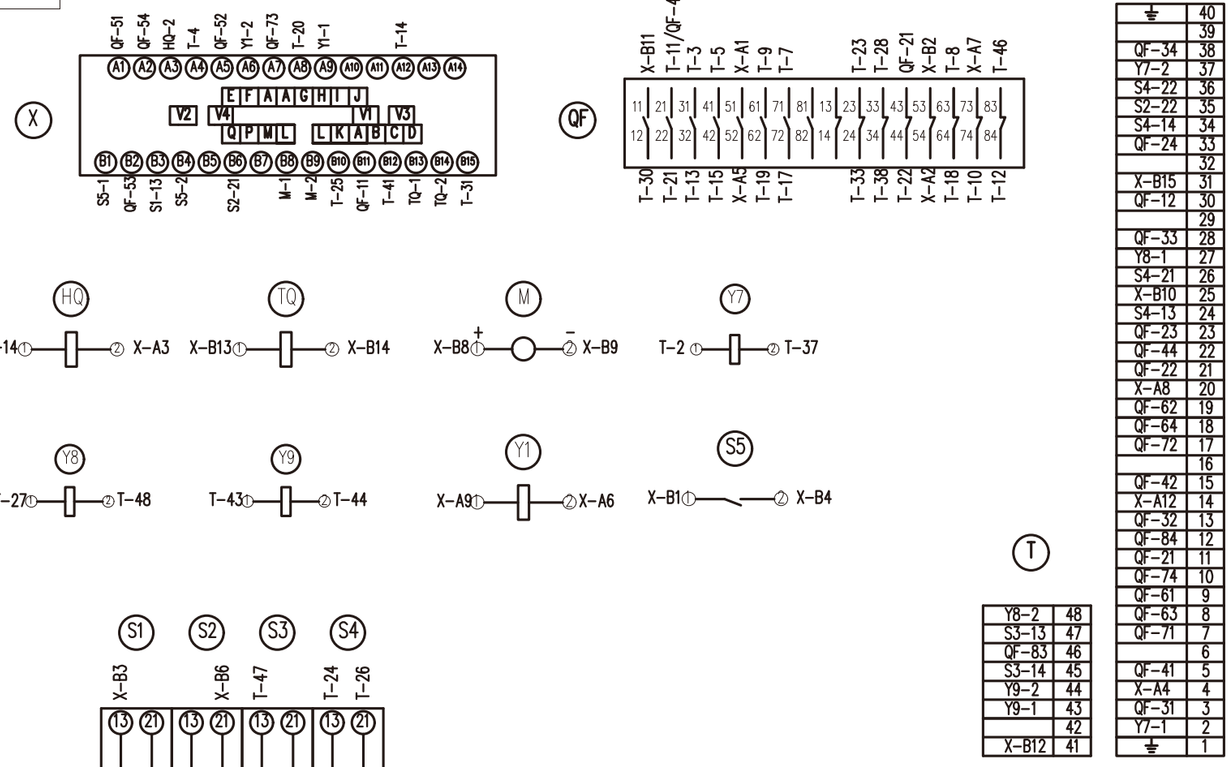

标记	处数	分区	更改文件号	签名	日期
设计			标准化		
校对					
审核					
工艺			批准		

VS1-12固定二次接线图
(8K8B)

用户				
合同编号				
图样标记	数量	重量	比例	

道(借)用件登记
CAXA制图
电脑文件名
旧底图总号
底图总号
签字
日期

VS1-12

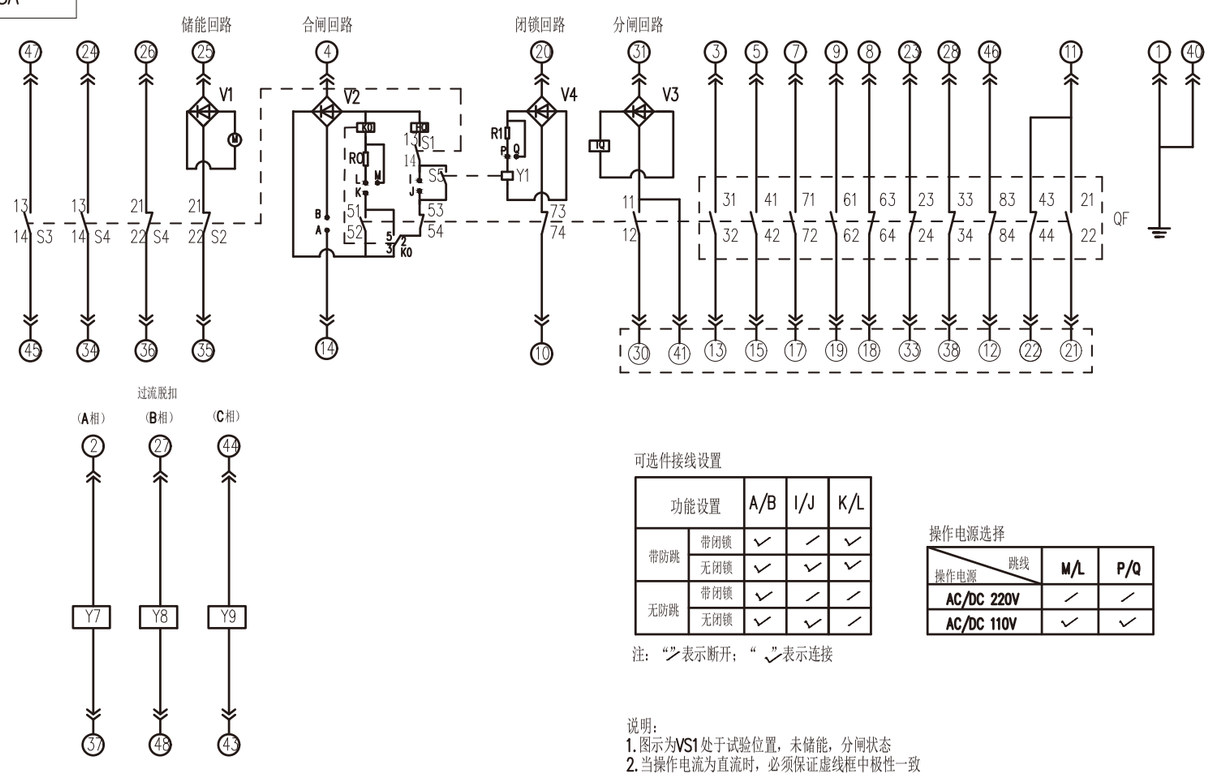

可选件接线设置

功能设置		A/B	I/J	K/L
带防跳	带闭锁	✓	／	✓
	无闭锁	✓	✓	✓
无防跳	带闭锁	✓	／	／
	无闭锁	✓	✓	／

注：“／”表示断开；“✓”表示连接

操作电源选择

操作电源 \ 跳线	M/L	P/Q
AC/DC 220V	／	／
AC/DC 110V	✓	✓

说明：
1. 图示为VS1处于试验位置，未储能，分闸状态
2. 当操作电流为直流时，必须保证虚线框中极性一致

S5：闭锁电磁铁微动开关	HQ：合闸线圈	K0：防跳继电器（可选）
S1-S4：微动开关（储能后切换）	TQ：分闸线圈	Y1：闭锁线圈（可选）
QF：辅助开关（分合操作时切换）	M：储能电机	V1-V4桥式整流器（可选）
a/b;i/j;k/l;m/l;p/q：跳线	R0-R1：电阻	Y7-Y9：过流脱扣线圈（可选）

标记	处数	分区	更改文件号	签名	日期
设计			标准化		
校对					
审核					
工艺			批准		

VS1-12固定二次原理图
(8K8B)

用户				
合同编号				
图样标记	数量	重量	比例	

道(借)用件登记
CAXA制图
电脑文件名
旧底图总号
底图总号
签字
日期

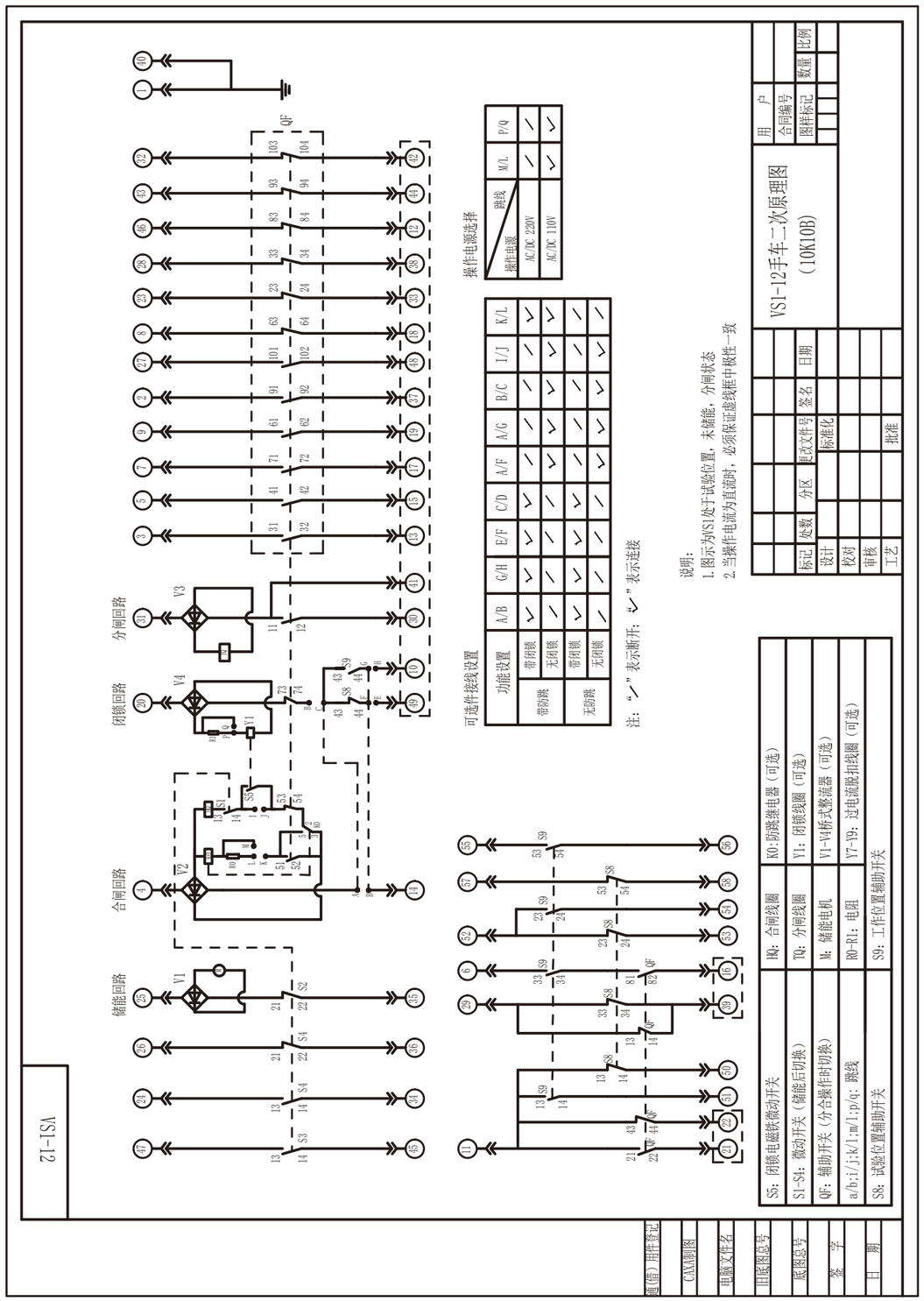
VS1-12
分闸回路
合闸回路
储能回路
闭锁回路
QF
V1
V2
V3
V4
S1
S2
S3
S4
S5
S8
S9
操作电源选择
跳线
操作电源
AC/DC 220V
AC/DC 110V
功能设置
带防跳
无防跳
带闭锁
无闭锁
可选件接线设置
A/B
G/H
E/F
C/D
A/F
A/G
B/C
I/J
K/L
注：“↙”表示断开；“↘”表示连接
说明：
1. 图示为VS1处于试验位置，未储能，分闸状态
2. 当操作电流为直流时，必须保证虚线框中极性一致
VS1-12手车二次原理图
（10K10B）
标记 处数 分区 更改文件号 签名 日期
设计
校对
审核
标准化
工艺
批准
用户
合同编号
图样标记
数量 比例
S5：闭锁电磁铁微动开关
S1-S4：微动开关（储能后切换）
QF：辅助开关（分合操作时切换）
a/b:i/j:k/l:m/l:p/q：跳线
S8：试验位置辅助开关
HQ：合闸线圈
TQ：分闸线圈
M：储能电机
R0-R1：电阻
KO：防跳继电器（可选）
Y1：闭锁线圈（可选）
V1-V4:桥式整流器（可选）
Y7-Y9：过电流脱扣线圈（可选）
S9：工作位置辅助开关
更改文件号
签名
日期
标准化
批准
审核
校对
设计
工艺
图样标记
数量
比例
用户
合同编号
CAM制图
电脑文件名
旧底图总号
底图总号
签字
日期
重(借)用作登记

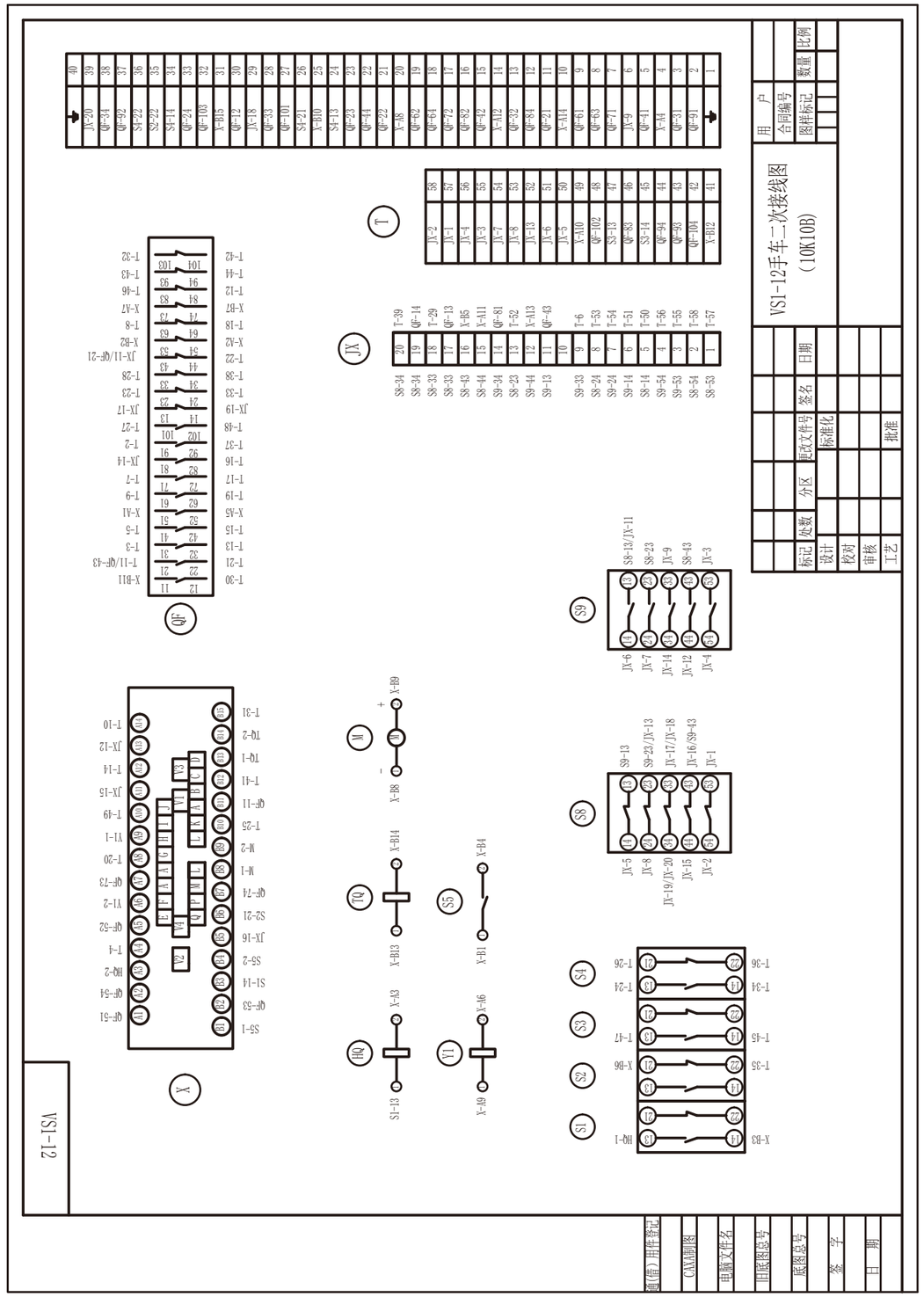
VS1-12
VS1-12手车二次接线图
（10K10B）
QF
T
JX
M
S9
S8
S5
S4
S3
S2
S1
HQ
TQ
Y1
标记 处数 分区 更改文件号 签名 日期
设计
校对
审核
标准化
工艺
批准
用户
合同编号
图样标记
数量 比例
CAM制图
电脑文件名
旧底图总号
底图总号
签字
日期
重(借)用作登记

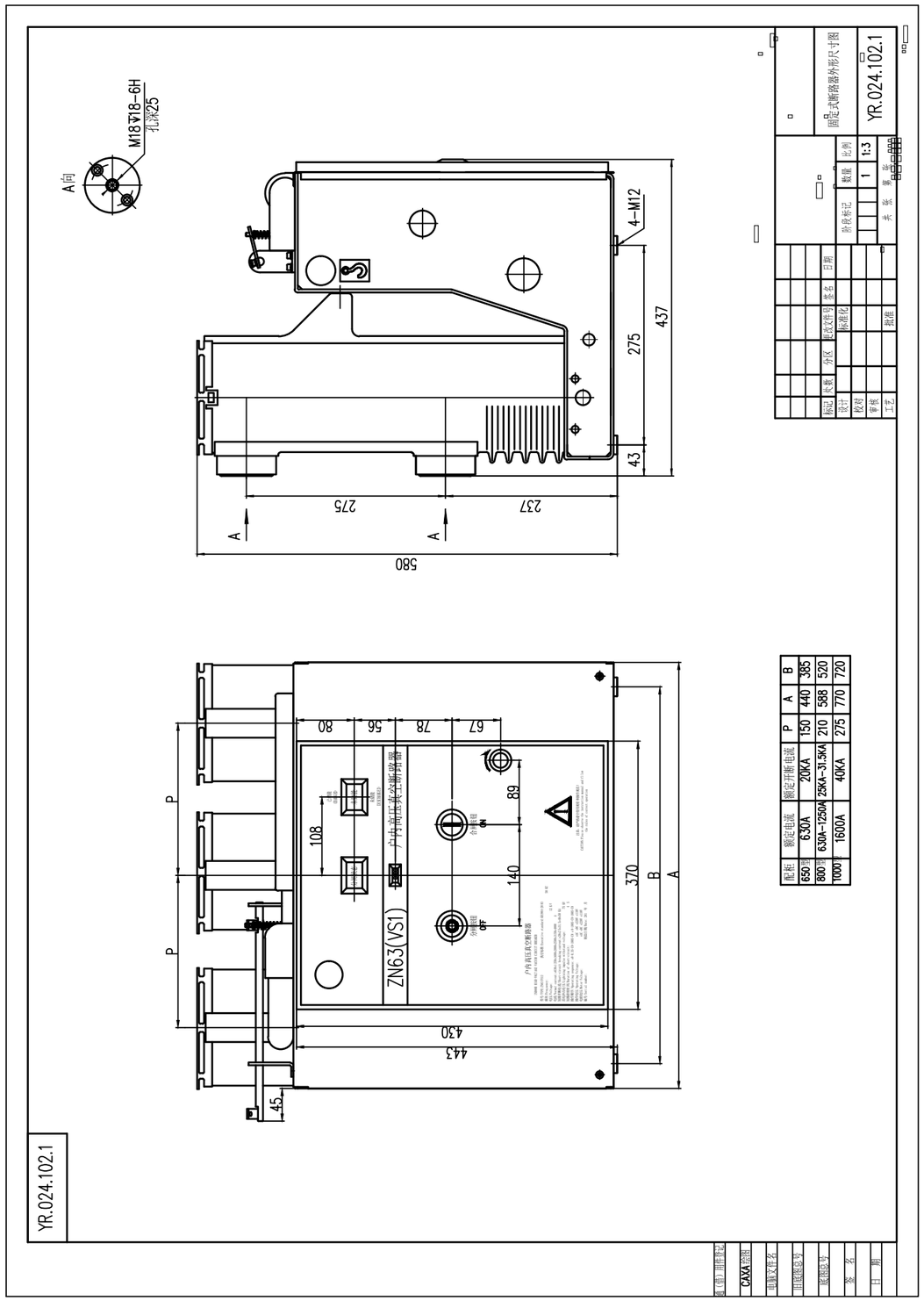

配柜	额定电流	额定开断电流	P	A	B
650柜	630A	20KA	150	440	385
800柜	630A~1250A	25KA~31.5KA	210	588	520
1000柜	1600A	40KA	275	770	720

Recommended size of circuit breaker and cabinet

VS1-12 (650) and cabinet (650) recommended size diagram:
VS1-12(800) and cabinet (800) recommended size diagram:

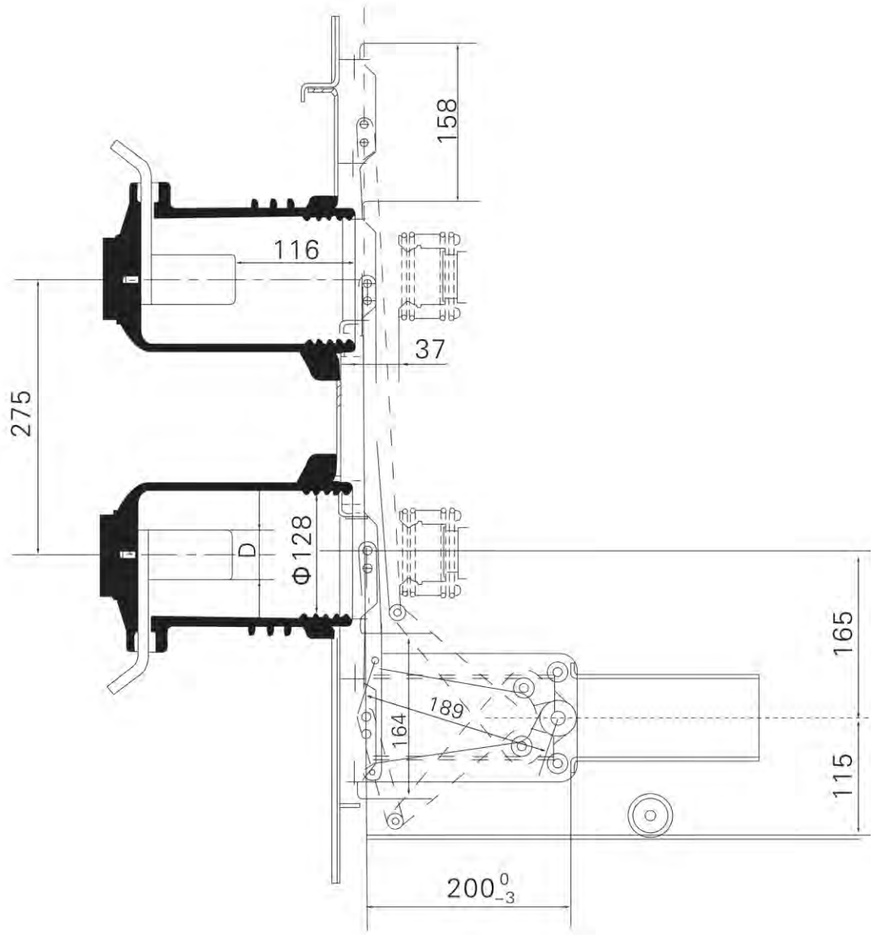

Rated current (A)	630	1250	1600
Rated short circuit breaking current (KA)	20、25、31.5	20、25、31.5、40	31.5
Fit static contact size (mm)	ϕ35	ϕ49	ϕ55

VS1-12(1000) and cabinet (1000) recommended size diagram:

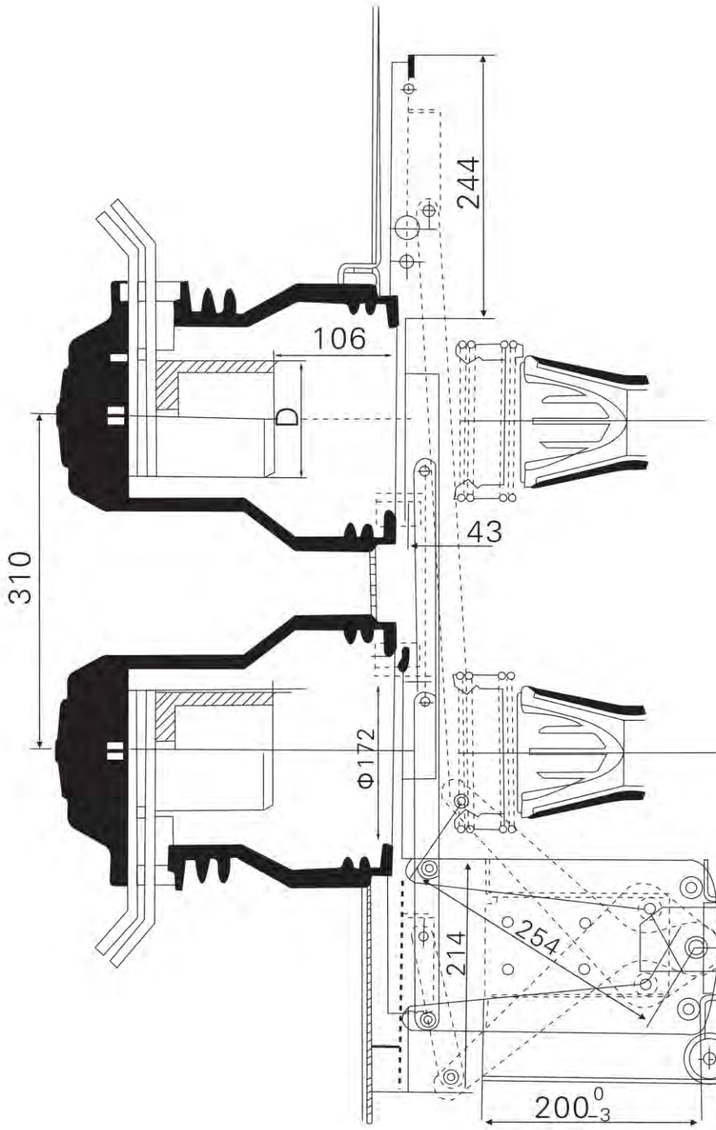

Rated current (A)	1600	2000	2500	3150	4000*
Rated short circuit breaking current (KA)	31.5、40	31.5、40	31.5、40	31.5、40	40
Fit static contact size (mm)	Φ79		Φ109		

Matching size diagram of dynamic and static contacts:

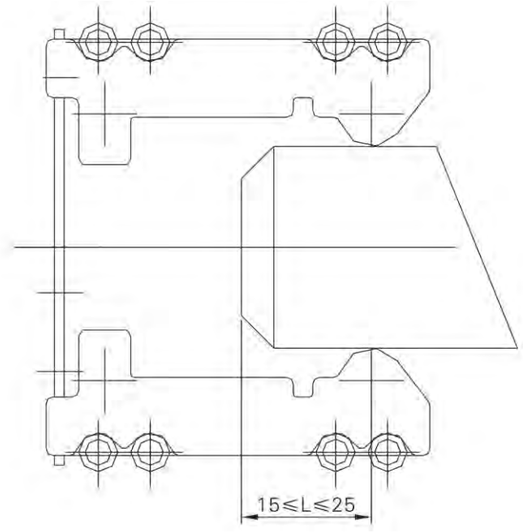

Grounding device assembly dimensions

VS1-12 (650) and VS1-12 (800) grounding assembly dimensions

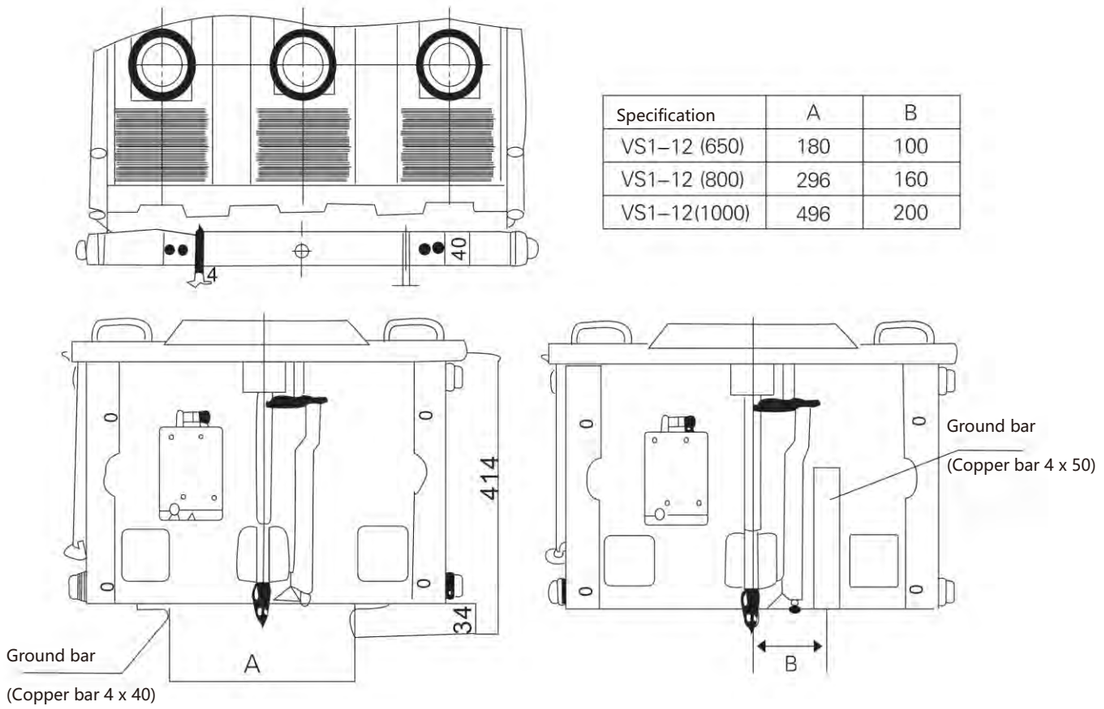

Specification	A	B
VS1–12 (650)	180	100
VS1–12 (800)	296	160
VS1–12(1000)	496	200

VS1-12 (1000) grounding device assembly size drawing:

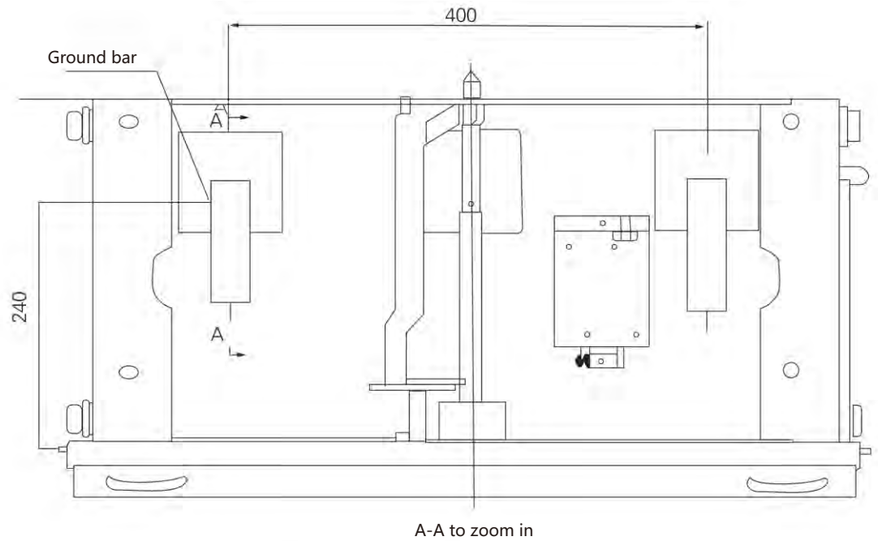

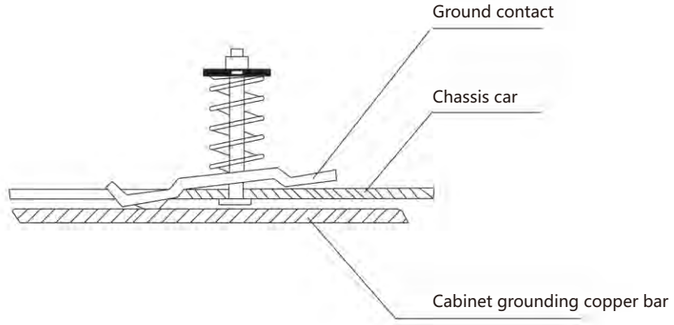

○ configuration

Secondary control voltage

DC220V,AC220V,DC110V, AC110V

Secondary control optional configuration:

- Locking device:
  Function: When the secondary control power supply is not connected or lower than the technical conditions to prevent closing.
- Overcurrent device:
  Function: In the case of a circuit overload or short circuit, through the overcurrent relay to make the action of the overcurrent coil, so that the circuit breaker. Generally added in A, C phase, there are also three phases added, overcurrent release has 3.5A and 5A two kinds.
- Undervoltage and undervoltage trip device:
  The undervoltage release automatically opens the circuit breaker when the PT voltage is less than 35% Un.

- Reliable closing of circuit breaker when PT voltage>85% Un; The voltage loss release cannot close when the PT voltage is<35% Un, and the circuit breaker should not open when the PT voltage is>65% Un.
  Note: If undervoltage and undervoltage release devices are selected, the overcurrent device can only use two overcurrent devices.

Grounding device:

- Based on the cabinet widths, the circuit breaker can be classified into 650 wide grounding schemes, 800 wide grounding schemes, and 1000 wide grounding schemes. (See Figure 6.10)

Electrical parameter table of secondary components

- Operating voltage 220V

Minimum/maximum	Closing electromagnet	Switching electromagnet	Locking electromagnet
Loop current	1.42/1.67A	1.1 A/ 1.67A	21mA/25mA
Power (W)	313/368	240/368	4.7/5.5

- Operating voltage 110V

Minimum/maximum	Closing electromagnet	Switching electromagnet	Locking electromagnet
Loop current	2.84/3.34A	2.16 A/ 3.34A	21mA/25mA
Power (W)	312/368	239/368	2.3/2.8

- Note: anti-jump device

After closing the circuit breaker, if the closing signal is not removed in time, the internal anti-jump control loop of the circuit breaker will cut off the closing loop to prevent multiple reclosing. If a comprehensive protection device is used on the cabinet with anti-jump function, it is necessary to confirm whether the anti-jump device needs to be installed.

In order to prevent accidents, grease and other work of the operating mechanism should be carried out in the state of no energy storage. The fault maintenance of the circuit breaker should be carried out by trained personnel or service personnel of the manufacturer to make correct adjustments.

○ configuration

NO.1

When the circuit breaker is lifted from the packing box, the hook should be hung on the clearly marked lifting hole on the circuit breaker. The upper and lower outlet arms should not be stressed when moving. The circuit breaker should not be subjected to large shock vibration.

"Note: Please remove the lifting device as required before formal loading operation.

NO.2

The circuit breaker has been strictly inspected before delivery, and the parameters meet the technical requirements. The following preparations must be made before the primary circuit is energized.

- Check if the circuit breaker is damaged. If there is any damage, please stop using it.
- Removing dirt, especially on insulation surfaces, can affect the insulation performance of products due to dirt caused during transportation or storage.
- Manually operate the circuit breaker according to regulations for energy storage, closing, and opening, and observe whether the energy storage status and opening position indication are normal.
- Use the operating power supply to operate the circuit breaker for energy storage, opening and closing, and observe whether the energy storage status and opening and closing positions are normal.
- Insert the push handle into the push hole, shake clockwise to push in, and counterclockwise to push out. The total advance stroke is 200mm. In the opening state, it should smoothly enter the working or testing position. Please rotate the handle at a medium speed for about 20 turns. When you hear a "click" sound, it is in place (avoid damaging the propulsion mechanism due to excessive force), and the corresponding position indication (S8, S9) circuit is connected.

Our goal is the sea of stars!

ZHEJIANG ZHEGUI ELECTRIC CO,. LTD.

Address: No.316 Weishiyi Road , Yueqing City,
Zhejiang Province, China
ProvinceTel: 0577-62657695/626577696
Email address:service@giantele.com
Website: www.giant-electric.com

Giantele®

ZGQ5

Double Power automatic transfer switch



www.giant-electric.com

ZGQ5

Double Power automatic transfer switch

Product introduction

ZGQ5 Automatic transfer switch (ATS), is a switch and logic control in one, without additional controller, truly realize the electromechanical integration of the automatic transfer switch, with voltage detection, frequency detection, electrical, mechanical interlock and other functions, can achieve automatic, electric remote, emergency manual control.

ZGQ5 series automatic transfer switch is mainly used for AC 50Hz, rated voltage 380V DC rated voltage 220V, rated current 16 to 3200A distribution or motor network in the main one standby or mutual standby power switching system and the load switching of mains and generator sets. At the same time, it can be used for infrequently connecting and disconnecting circuits and lines.

The ZGQ5 switch is designed as a metal shell, small and strong. ZGQ5 switch, the control part is metal shell, the switch shell parts are made of glass fiber unsaturated polyester resin, with strong dielectric properties, protection ability and reliable operation safety.





Model meaning

ZG	Q5	□	/	□
Zhejiang Zhejiang Cabinet Electric Co., LTD	Dual power automatic transfer switch	Current class		Three poles, four poles

Main technical performance parameters

ZGQ5 series automatic switch electrical and mechanical properties

Rated current (Ie)		20A	40A	63A	80A	100A	125A	160A	250A	400A	630A	800A	1000A	1250A	1600A
Rated insulation voltage (Ui)		750V								1000V					
Rated impulse withstand voltage (Uimp)		8kV								12kV					
Rated operating voltage (Ue)		AC400V													
Rated operating current (Ie)	AC-31A	20	40	63	80	100	125	160	250	400	630	800	1000	1250	1600
	AC-35A	20	40	63	80	100	125	160	250	400	630	800	1000	1000	1600
	AC-33A	20	40	63	80	100	125	160	250	400	400	800	800	800	1000
Rated switching capacity		10Ie													
Rated breaking capacity		8Ie													
Rated limited short-circuit power supply (Is)		50kA								70kA				100kA	120kA
Rated short-time power supply (Is)		7kA						9kA		13kA		26kA		50kA	
Transition time I-II or II-I		0.45s								0.6s		1.2s			
Control voltage		DC24V、48V、110V								AC220V					
Motor energy consumption															
Rated power	Activate	300W						325W		335W		400W	440W		
	Normal	55W						62W		74W		90W	98W		
Weight (kg)		7.0	7.2	7.2	7.2	7.5	7.5	8.8	9.0	16.5	17	32	36	40	43

Switch structure description

Electric key lock: control switch internal control line power supply, when the electric lock is opened, the switch can achieve automatic, operational control, strong "0" operation: when the electric lock is closed, the switch can only be manually operated.

Operating handle: When manually operating with the operating handle, the electric lock must be closed first.

Mechanism padlock: special maintenance, that is, first use the operating handle to make the switch in the "0 "stop position, and then pick up the padlock mechanism and padlock, can be repaired (pick up the padlock will cut off the internal control power supply of the switch, the switch can not be automatic, and can not achieve manual).

Indicator: Indicates the working status position of the switch (I, 0, II).

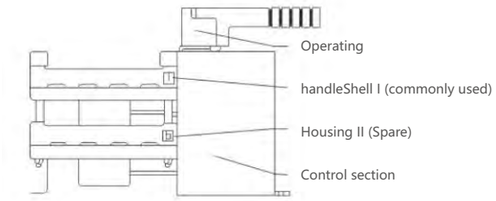

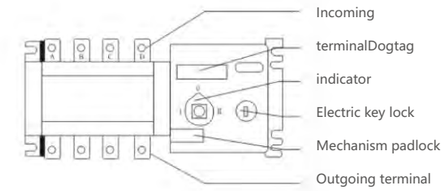

Usage method

Switching function

Automatic function: When the common power supply is cut off, the switch automatically switches to the standby power supply;

When the usual power supply returns to normal, the switch automatically returns to the usual power supply. Strong "0" function: Start the strong "0" button, the switch will cut off the dual circuit power supply.

Remote control function: that is, remote control, press the "I" button; The commonly used power supply works; Press the "II" button, the standby power supply wage; Press the "0" button to cut off both power supplies.

Select the switch function as required and connect cables according to the function.

Please specify switch model, current specification and required function when ordering.

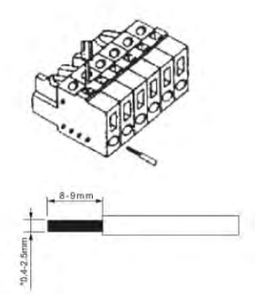

Force down with a small letter as shown in the picture, and insert the wire as shown in the picture

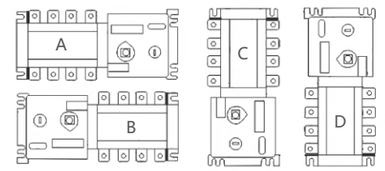

A.B.C is correct and D is incorrect

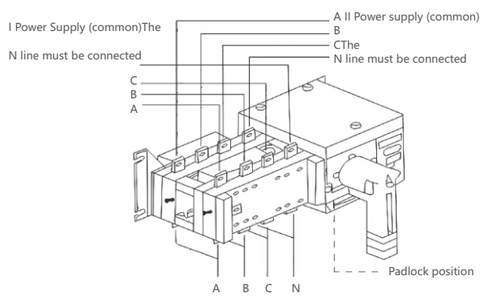

Cable connection diagram of MCQ5-100A/4 on the load side

○ Wiring terminal operation method

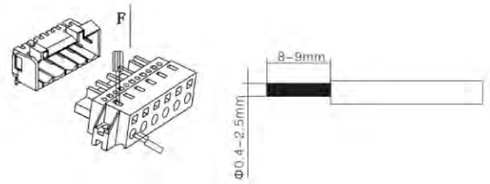

Apply downward force with the small line driver as shown and insert the wire as shown.

○ Type 100-630 wiring method

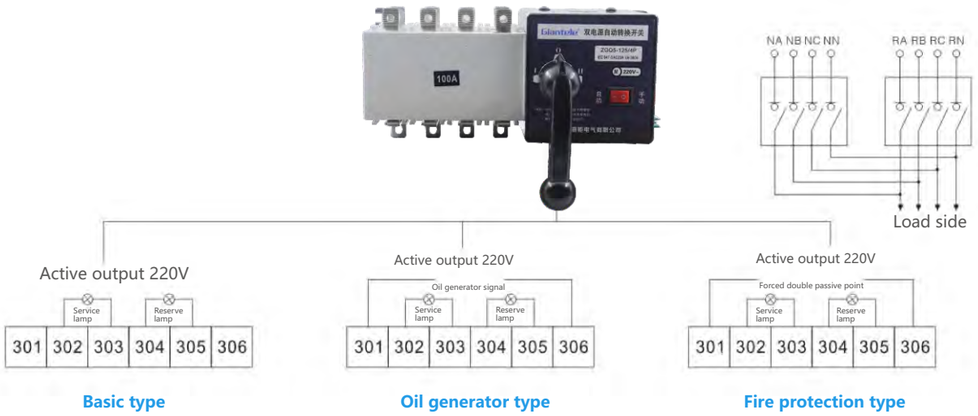

○ Connecting cables 1000A-3200A

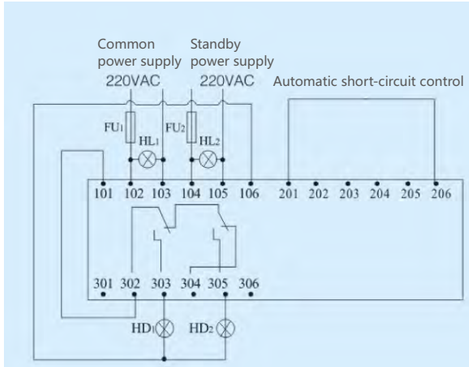

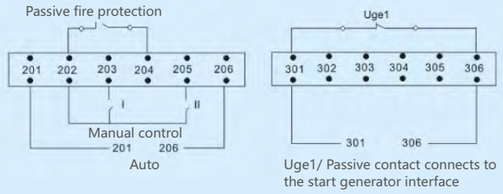

Note:

1. The above picture shows the electrical principle of the fire type dual power supply and the wiring diagram of the external terminal;

2. Record 101-106, 201-206, 301-306, 401-406 and 501-506 as 1#, 2#, 3#, 4# and 5# terminals respectively;

3.Switches below 250 contain 1#, 2# and 3# terminals, and switches above 1000 contain 1#, 2#, 3#, 4# and 5# terminals;

4.302-303 is the common active closing indicator, 302-304 is the common double active indicator, 302-305 is the standby active closing indicator, and 301-306 is the generator terminal.

○ Outline and mounting dimensions

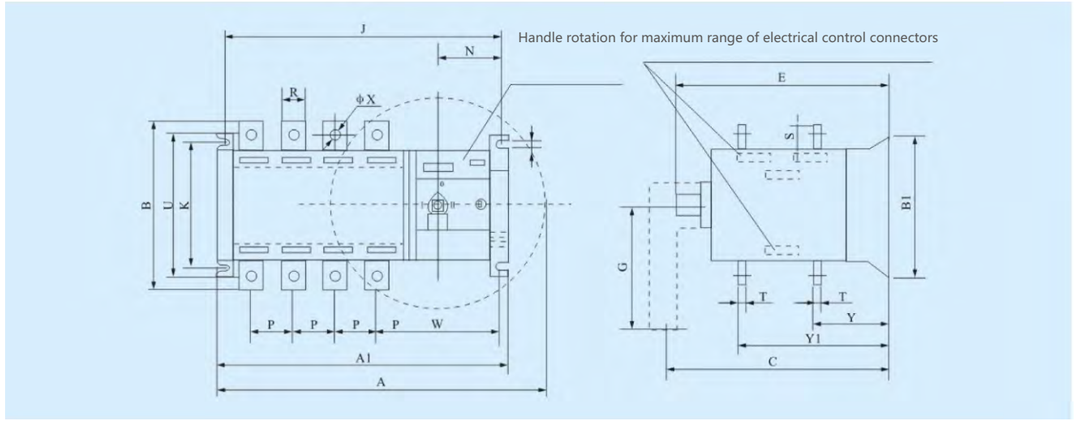

Specs	Outline and mounting dimensions																				
In	A	A1	B	B1	C	E	G	J	K	L	N	P	R	S	T	U	W	①X	Y	Y1
100A/3	235	232	135	105	134	133	115	221.5	84	7	74.5	30	14	18	2.5	105	126	6	36	86
100A/4	247	244	135	105	134	133	115	233.5	84	7	74.5	30	14	18	2.5	105	126	6	36	86
125A/3	292	270	135	128	230	189	145	254	102	7	91	36	20	25	3.5	127	158	9	55	125
125A/4	322	300	135	128	230	189	145	284	102	7	91	36	20	25	3.5	127	158	9	55	125
160A/3	292	270	135	128	230	189	145	254	102	7	91	36	20	25	3.5	127	158	9	55	125
160A/4	322	300	135	128	230	189	145	284	102	7	91	36	20	25	3.5	127	158	9	55	125
250A/3	356	312	170	142	261	208	145	293	102	7	91	50	25	30	3.5	142	168	11	60	145
250A/4	406	362	170	142	261	208	145	343	102	7	91	50	25	30	3.5	142	168	11	60	145
400A/3	487	368	260	222	284	273	189	351	180	9	93	65	32	40	5	222	203	11	83	193
400A/4	552	433	260	222	284	273	189	416	180	9	93	65	32	40	5	222	203	11	83	193
630A/3	487	368	260	222	284	273	189	351	180	9	93	65	40	50	6	222	203	12	83	193
630A/4	552	433	260	222	284	273	189	416	180	9	93	65	40	50	6	222	203	12	83	193
800A/3	646	519	357	250	363	350	443	499	220	11	87	120	60	69	8	250	207	12.5	109	254
800A/4	760	633	357	250	363	350	443	613	220	11	87	120	60	69	8	250	270	12.5	109	254
1000A/3	646	519	357	250	363	350	443	499	220	11	87	120	60	69	8	250	207	12.5	109	254
1000A/4	760	633	357	250	363	350	443	613	220	11	87	120	60	69	8	250	207	12.5	109	254
1250A/3	646	519	357	250	363	350	443	499	220	11	87	120	80	69	8	250	207	13	110	255
1250A/4	760	633	357	250	363	350	443	613	220	11	87	120	80	69	8	250	207	13	110	255
1600A/3	646	519	357	250	363	350	443	499	220	11	87	120	80	69	10	250	207	13	110	255
1600A/4	760	633	357	250	363	350	443	613	220	11	87	120	80	69	10	250	207	13	110	255
2000A	800	633	460		542		447	610			84.5		80	120	10					169
2500A	800	633	460		542		447	610			84.5		80	125	15					174
3200A	800	633	460		542		447	610			84.5		80	130	20					179

Our goal is the sea of stars!

ZHEJIANG ZHEGUI ELECTRIC CO,. LTD.

Address: No.316 Weishiyi Road , Yueqing City,
Zhejiang Province, China
ProvinceTel: 0577-62657695/626577696
Email address:service@giantele.com
Website: www.giant-electric.com

Giantele®

ZN-85

High voltage vacuum circuit breaker



www.giant-electric.com

ZN85-40.5

High voltage vacuum circuit breaker

Model meaning

The circuit breaker is suitable for the three-phase AC 50Hz, 40.5kV system, for industrial and mining enterprises, power plants and substations as the division of load current, overload current, fault current, and suitable for frequent operation occasions.



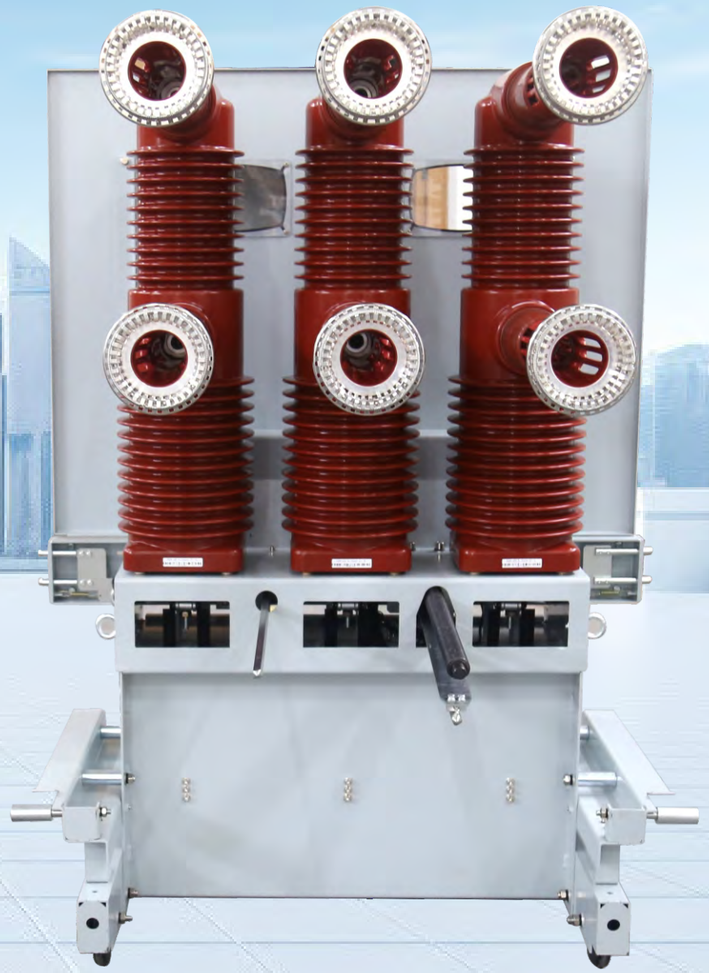

Model meaning

ZN	85	-	40.5	/	□	-	□
Indoor vacuum	Design sequence number		Rated voltage (kV)		Rated current (A)		Rated short circuit breaking current (kA)

Environmental condition

- The upper limit of ambient temperature is +40℃, and the average value measured within 24 hours does not exceed 35℃; Lower limit -15℃.
- The altitude does not exceed 1000m.
- Relative humidity: the daily average does not exceed 95%; The monthly average value does not exceed 90%;
- Water vapor pressure: daily average does not exceed 2.2kPa, monthly average does not exceed 1.8kPa.
- The surrounding air is not significantly contaminated by dust, smoke, corrosive or combustible gases, vapors and salt spray.
- When used under the above normal environment and other conditions specified in GB/T11022-1999, the user can negotiate with the manufacturer to solve the problem.

Special service conditions

According to the provisions of the national standard GB/T11022-1999 "Common technical requirements for High voltage switchgear and control equipment standards", the circuit breaker should operate under normal conditions. If the working conditions used by the user are different from the normal conditions of use, such as: the installation site is more than 1000m above sea level, the surrounding air temperature exceeds the limit value specified in the normal conditions of use, or the high humidity is easy to produce condensation, should be negotiated with the manufacturer.nt and other conditions specified in GB/T11022-1999, the user can negotiate with the manufacturer to solve the problem.



Product outline and matching dimensions

As shown in Figure 1

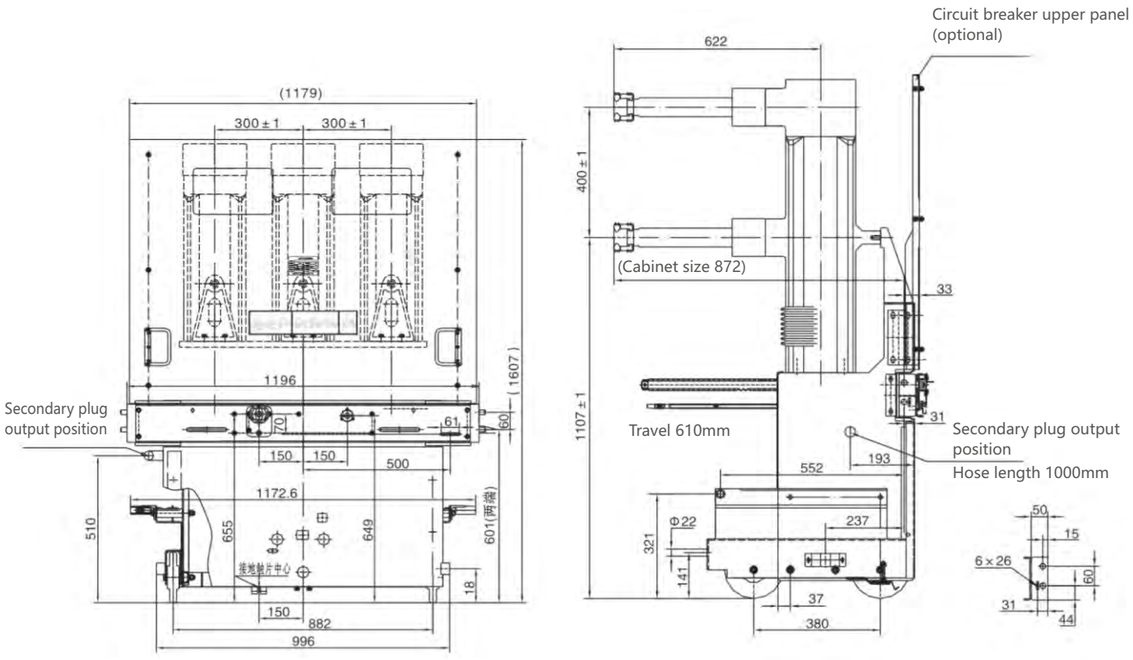

Figure 1 Circuit breaker outline

Specific data

1, with static contact diameter:
1250A-Φ49;
1600A-Φ55;
2000 A -Φ 79;
2500 A- Φ109
PT, fuse handcart Φ-35.

2, the output position of the secondary plug: the height of the left side of the frame is 510mm, the depth is 193mm; Hose length: frame side panel to plug about 1000mm

Technical parameter

The main technical parameters of circuit breakers are shown in Table 1.

Table 1

NO.	Parameter name	Unit	Numerical value
1	Rated voltage	kV	40.5
2	1 min power frequency withstand voltage	kV	95
3	Lightning impulse withstand voltage	kV	185
4	Rated frequency	Hz	50
5	Rated current	A	1250;1600;2000;2500
6	Rated short-time withstand current	kA	20;25;31.5
7	Rated peak withstand current	kA	50;63;80
8	Rated short circuit duration	S	4
9	Rated short-circuit breaking current	kA	20;25;31.5
10	Rated short-circuit closing current	kA	50;63;80
11	Rated operating sequence		0-0.3s- CO -180s- CO
12	Closing time	ms	50~100
13	Opening time	ms	35~60
14	Loop resistance (without contact arm)	μΩ	≤45 (rated current 2500A) ≤60 (rated current 1600A; 2000A) ≤80 (rated current 1250A; 630A)
15	Breaking time	ms	≤80
16	Rated short circuit breaking current breaking ti	Times	20
17	Rated operating voltage	V	-110/~110,-220/~220
18	Rated working current of switching coil	A	1.05/(-110V);0.96/(-220V)
19	Mechanical life	次	10000

The circuit breaker vacuum interrupter can adopt the latest design of the coil type longitudinal high magnetic field structure vacuum interrupter from the United States Cutler Hammer company, Siemens Company or domestic production.

Structure and working principle

Structure

The circuit breaker adopts the up and down arrangement structure, which effectively reduces the depth of the circuit breaker. The circuit breaker adopts a composite insulation structure, and the three-phase interrupter and the connected live body are isolated by three independent epoxy resin insulating enclosures. After the composite insulation structure is adopted, the circuit breaker meets the requirements of air clear distance and creep distance under normal operating conditions, and effectively reduces the volume of the circuit breaker. The main electric circuit vacuum interrupter and the dynamic and static conductive connection are installed in the insulation cylinder, so that the pole distance is 300mm. The main circuit electrical connections are all fixed connections, with high reliability. The insulation cylinder is mounted on the circuit breaker frame.

The operating mechanism adopts a specially designed spring operating mechanism, which is installed in the circuit breaker frame, and its structural characteristics are more suitable for the up and down layout of the circuit breaker, and become an integral part of the overall structure of the circuit breaker. The design of the mechanism is simple, and the output curve matches well with the requirements of the arc extinguishing chamber. Its performance is more suitable for the characteristics and requirements of 40.5kV vacuum circuit breaker.

The overall layout of the circuit breaker is reasonable, beautiful, simple, flexible operation, with reliable electrical performance, long service life, easy maintenance, and less maintenance of the mechanism, suitable for a variety of occasions and workplaces with harsh operating conditions.

Working principle

Electrical working principle

The main electrical circuit is shown in Figure 2: The vacuum interrupter is the core component of the vacuum circuit breaker breaking current. The vacuum interrupter used in this circuit breaker is a newly designed vacuum interrupter with the inner sealing structure of the main shield, and the diameter and length of the pipe are significantly reduced. A series of research tests show that the new vacuum interruptor has good breaking ability and insulation performance, and the breaking current is 31.5kA.

When the circuit breaker receives the opening instruction, the moving contact of the arc extinguishing chamber is separated from the static contact at a certain opening speed under the drive of the mechanism, and the cutting current of the vacuum arc extinguishing chamber completes the opening operation.

Mechanism energy storage principle

- Motor energy storage operation

The mechanism energy storage unit adopts a single-stage deceleration structure, and the motor inputs power from one end of the small sprocket shaft and drives the large sprocket through the roller chain. The big sprocket turns and drives the drive claw at the same time. The drive claw occluses with the drive block during the movement to realize the closing spring energy storage. When the spring energy storage is in place, the stroke switch is pushed to cut off the motor power supply. At the same time, the clutch push wheel lifts the drive claw out of the drive block. Thus, the energy storage mechanical system is not damaged under the action of inertia force.

- Manual energy storage operation

The manual energy storage operation handle (about 420mm long, accessories) is inserted into the jack of the energy storage rocker arm, and then the left and right swing (about 60 degrees), the use of one-way bearings, drive the energy storage shaft rotation to achieve the closing spring energy storage.

After the energy storage of the mechanism is completed, the circuit breaker can accept the closing instruction at any time to realize the closing operation.

Circuit breaker operation principle

- Mechanism combined and partial action principle

The joint operation of the mechanism is realized by the cam-connecting rod mechanism.

Closing operation

When the closing spring of the mechanism is finished storing energy, the closing spring is kept in the state of energy storage due to the action of the main child, the energy storage keeps the main child clasp in the direction of the release trend under the action of the CAM roller force. At this time, if the closing half shaft is rotated clockwise to the release position (about 20 degrees), the energy storage keeps the main child clasp will move rapidly in the clockwise direction. The energy storage holding state is lifted, the closing spring quickly releases energy, and drives the CAM to rotate. At the same time, the connecting rod mechanism moves to the closing position under the drive of the CAM, so as to complete the closing action of the mechanism. At this time, the travel switch is reset, the motor is energized and the closing spring is stored again, so that the mechanism is in the closing energy storage state.

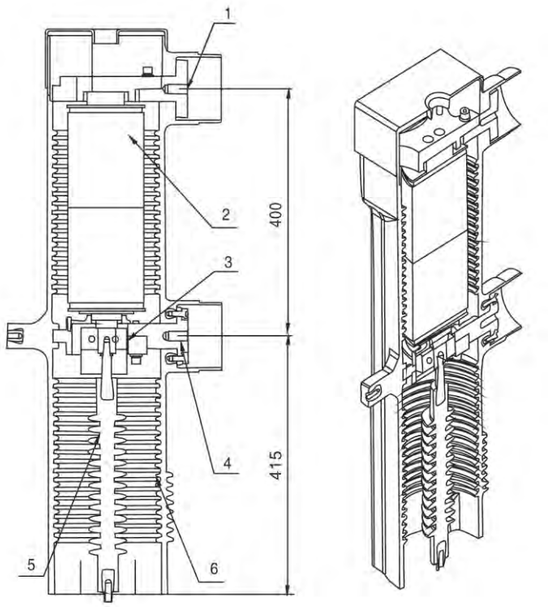

1. Attach the conductive block
2. Vacuum interrupter
3. Soft connection
4. Lower the conductive block
5. Operate the insulator
6. Insulation cylinder

Figure 2 Main electrical circuit diagram

Opening operation

The closing state of the mechanism is maintained by the gusset plate and half shaft of the connecting rod mechanism. At this time, if the opening half shaft is rotated counterclockwise to the tripping position (about 20 degrees), the gusset will move rapidly in the counterclockwise direction, and the balance of the connecting rod mechanism will be lifted. Under the action of the load force of the circuit breaker, it moves to the opening position, so as to complete the opening action of the mechanism.

- Circuit breaker operation principle

Circuit breaker closing operation principle

The circuit breaker structure diagram is shown in Figure 4.

When the closing spring of the mechanism is finished storing energy, the closing spring is kept in the state of energy storage due to the action of the main child, the energy storage keeps the main child clasp in the direction of the release trend under the action of the CAM roller force. At this time, if the closing half shaft is rotated clockwise to the release position (about 20 degrees), the energy storage keeps the main child clasp will move rapidly in the clockwise direction. The energy storage holding state is lifted, the closing spring quickly releases energy, and drives the CAM to rotate. At the same time, the connecting rod mechanism moves to the closing position under the drive of the CAM, so as to complete the closing action of the mechanism. At this time, the travel switch is reset, the motor is energized and the closing spring is stored again, so that the mechanism is in the closing energy storage state.

When the crank arm on the main shaft pushes the transmission insulator, the other end of both sides of the crank arm compresses the opening spring (1) to complete the energy storage; The arm of the intermediate phase presses the circuit breaker closing indicator, so that the indicator indicates the closing state. The circuit breaker closes.

The circuit breaker structure diagram is shown in Figure 4.

The circuit breaker is in the state of closed energy storage or closed without energy storage, when the opening instruction is received, the mechanism will release the closing state and quickly open the gate. Under the action of the opening force, the breaker breaks open, and the isolation chamber cuts off the current to form an open circuit. The crank arm, transmission insulator, main shaft, opening spring, closing and opening indicator plate are restored to the opening position. Circuit breaker opening operation complete.

Propulsion mechanism

Adopt lead screw, nut propulsion mechanism device, with overrunning clutch device. The circuit breaker can be easily moved in the switch cabinet, making the circuit breaker travel range accurate and reliable. See Figure 3.

Circuit breaker stroke: the standard stroke of the circuit breaker is 610±2mm, when there is a special need for the stroke, please indicate when ordering. The standard stroke of the circuit breaker 610mm can be adjusted appropriately, the adjustment range is ± 5mm, and the debugging method is shown in Figure 5.

Propulsion: The circuit breaker is in the test position and in the switching state. Open the small door (the left and right handles of the rolling mechanism and the interlocking operation handle of the ground switch need to be in position 1 of Figure 3), insert the rolling handle, and make the handle turn clockwise. When the handle is idling and accompanied by a "snap" sound, it means that the clutch action is exceeded, and the circuit breaker no longer moves to the working position. Remove the handle and close the small door, and the circuit breaker can be separated and closed.

Exit: The circuit breaker is in the working position and in the opening state, open the small door, insert the swing in handle, make the handle turn anticlockwise, when the handle is idling and accompanied by "click" sound, it means that the clutch action is exceeded, and the circuit breaker will not move and reach the test position; Remove the handle and close the small door to split and close the circuit breaker.

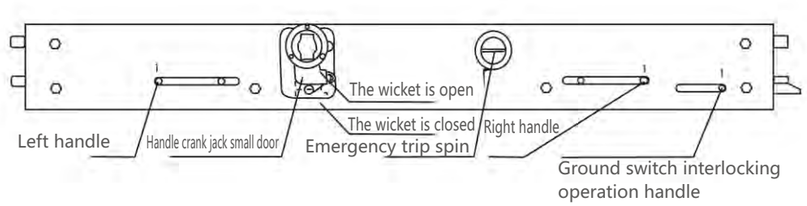

Figure 3. Propulsion mechanism

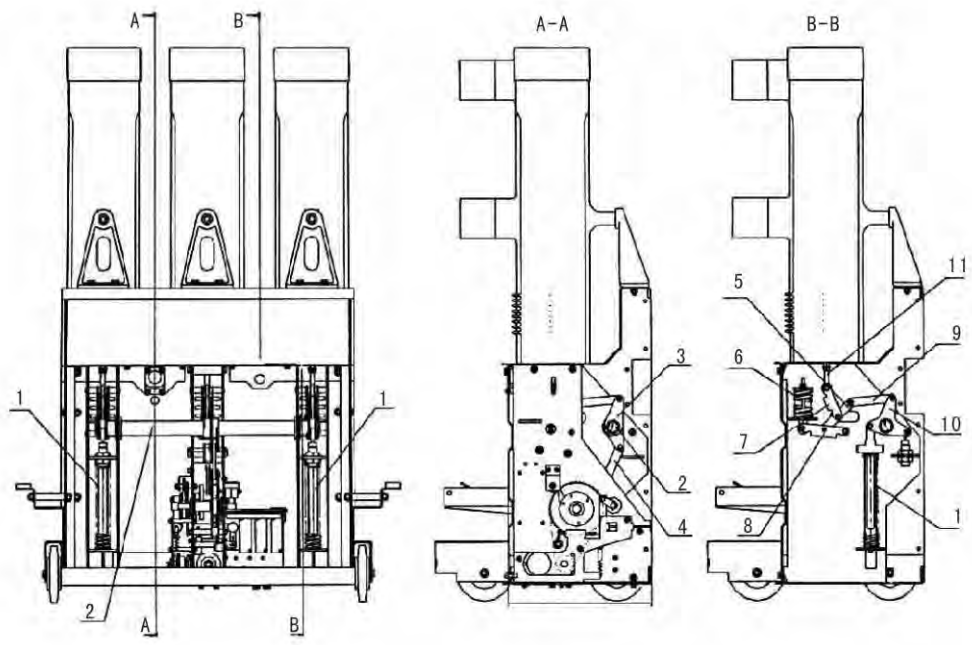

1. Opening spring
2. Large axis
3. Middle phase arm crank
4. Drive rod
5. Drive plate 2
6. Contact spring
7. Drive plate 3
8. Drive plate 4
9. Drive plate 1
10. Side arm swing
11. Rod end joint bearing

Figure 4 Schematic diagram of circuit breaker structure

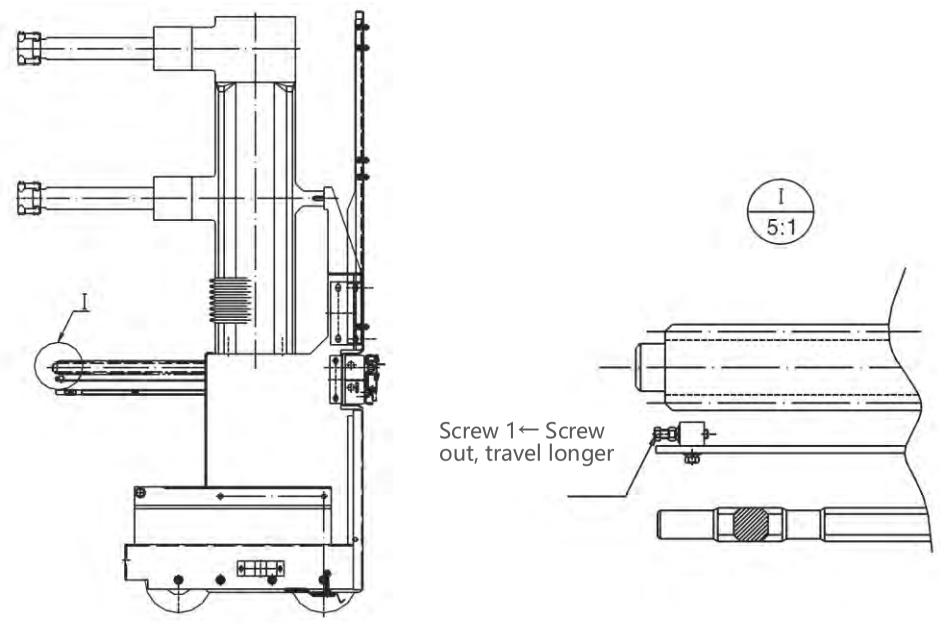

Figure 5 Schematic diagram of circuit breaker stroke adjustment

The secondary schematic diagram and wiring diagram of the circuit breaker are shown in the attached drawing.

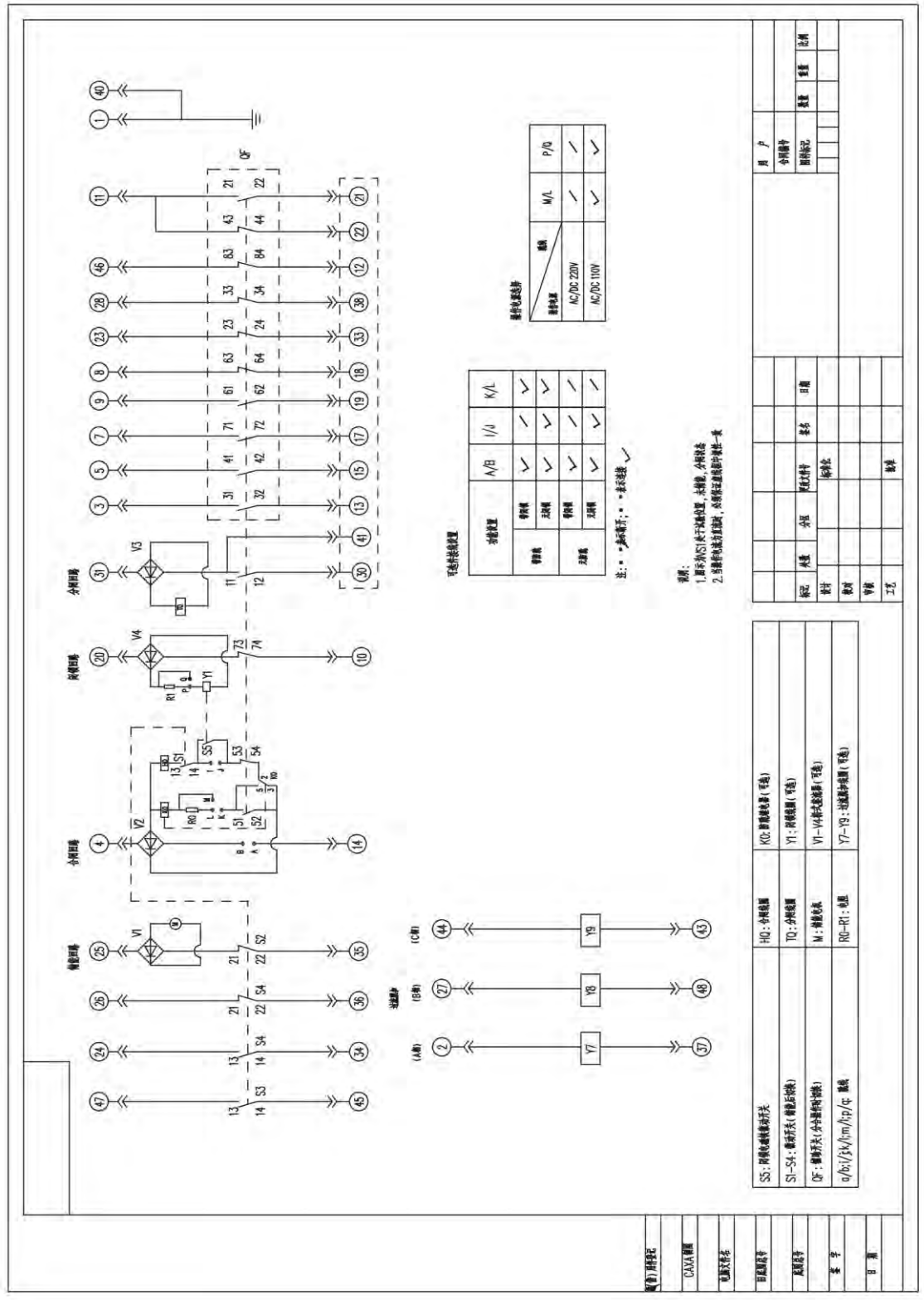

Figure 1 ZN85-40.5 secondary wiring diagram

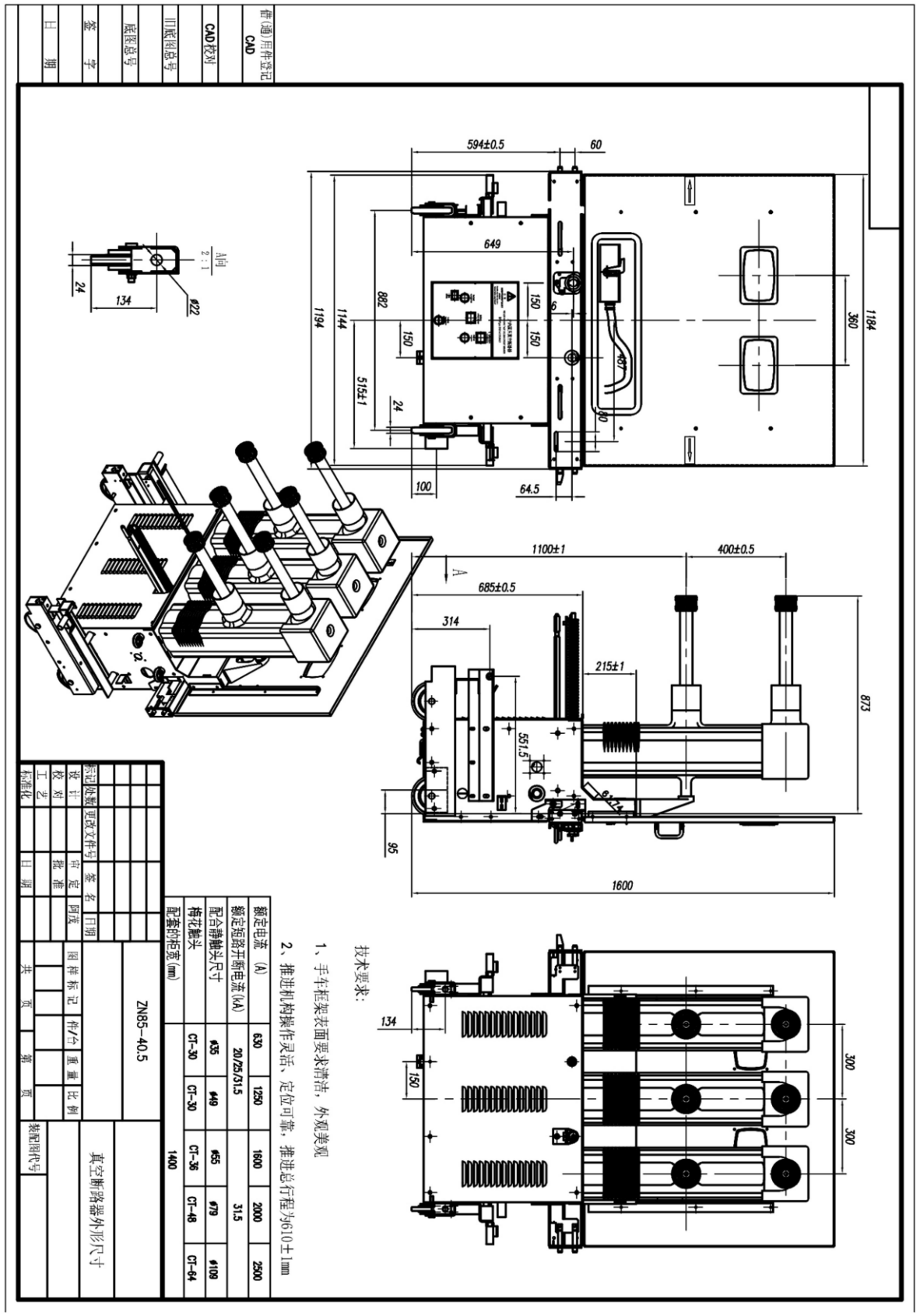

○ Installation and commissioning

Pre-installation inspection

After the circuit breakers are unpacked, check whether the components are complete, whether the circuit breakers are damp or damaged, and whether they work properly according to the packing list. Clean the surface after inspection. Check the vacuum degree of the vacuum isolation chamber with the power frequency voltage withstand method (the circuit breaker is opened, and the processing frequency is 95kV/1min at the fracture). After all the checks are passed, you can start the installation.

Debug

Products that are unpacked and checked in good condition generally do not need to be re-debugged. Only when the circuit breaker is found to not meet its technical requirements or replace important parts, the product needs to be debugged.

First, adjust the height of the joint bearing and the buffer at the lower end of the dynamic conductive rod of the vacuum isolation chamber, so that the opening distance of the vacuum isolation chamber contact is 18±1mm; Adjust the nut on the contact spring so that the contact stroke is 5±1 mm; Recheck whether the connection and oil buffer of the main shaft are normal. Finally, adjust the mechanism to make the mechanism operate normally, no matter manual, electric control, energy storage, closing, opening and other actions should not appear stuck phenomenon

After the circuit breaker is fully adjusted, it should meet the parameters listed in Table 2.

Table 2

N0.	Parameter name	Unit	Numerical value
1	Contact opening distance	mm	18±1
2	Overtravel	mm	5 ± 1
3	Allowable wear thickness of contact	mm	3
4	Average closing speed	m/s	0.8 ± 0.2
5	Average opening speed	m/s	1.8 ± 0.2
6	Contact closing bounce time	ms	≤ 5
7	The three phase contact is not closed at the same time	ms	≤ 2
8	The three phase contact has different opening time	ms	≤ 2

○ Use and troubleshooting

Circuit breaker rated operation sequence:
O-0.3s-CO-180s-CO
The opening and closing operation of the circuit breaker allows two operation modes:
electric operation mode and manual operation mode.

Electric operation mode

After the secondary plug of the circuit breaker is connected to the external control loop, remote control can be carried out on the opening and closing of the circuit breaker through the closing solenoid.

Manual operation mode

After the energy storage operation handle is inserted into the jack of the energy storage rocker arm to manually store energy, press the closing button on the panel to realize the closing operation, and then press the opening button to open the gate.

Fault handling
Common faults are as follows

The circuit breaker rejects because of the following possible causes:

The auxiliary switch cuts off the closing coil prematurely, and the core of the closing coil fails to push the closing shaft, resulting in rejection or improper closing; The pusher plate acting on the auxiliary switch of the mechanism should be adjusted to make the contact of the auxiliary switch reliable and punctual.

The shaft of the mechanism fails to support the roller on the CAM, and the mechanism fails to close and then the brake is opened; Should check whether the Zhi child is stuck or whether the Zhi child, the roller is damaged.

Circuit breaker rejection: the possible reason is that the opening half shaft is not in place; The rotation Angle of the opening half shaft should be adjusted so that it can fully rotate to the opening position under the push of the opening electromagnet.

When there is an unexplained fault or the fault cannot be handled, please contact the manufacturer for maintenance.

○ Maintenance

Circuit breakers in operation should be checked regularly, including:

- Check the vacuum degree of vacuum isolation chamber;
- Check whether the contact stroke and contact opening distance meet the requirements;
- Check whether fasteners are loose;
- Check whether the circuit breaker is dry and clean.
- Check the ablation of auxiliary switch contacts.

When the circuit breaker is found to be damp, all insulation parts should be checked in time. Dry the damp parts in the oven at 70-80℃ for 48 hours and then reassemble and debug them until they meet the parameters in Table 2.

All parts of the mechanism shall be checked every 2000 times of operation, and loose and poor lubrication shall be found and corrected in time.

If the short-circuit fault current of the isolation chamber is broken 20 times, the vacuum degree and contact burning condition of the isolation chamber should be checked. If it does not meet the requirements, replace the isolation chamber.

During use and maintenance, do not use hard objects (such as tools) to impact the vacuum isolation outdoor shell.

○ Transportation and storage

Transport

When the circuit breaker is transported, it must be put into a closed packing box to be fixed, and the loading and unloading packing boxes can only be taken as follows

Tool
1. Crane 2. Forklift 3. Driving

Attention:
1. Avoid impact and other destructive mechanical forces

2. When lifting the circuit breaker, the lifting device should not be hooked on the circuit breaker body or operating mechanism, but should be hooked in the lifting hole marked with the lifting mark of the circuit breaker (see Figure 6). To ensure that the circuit breaker is not impacted, to avoid other damaging mechanical stresses that occur during lifting.

3. Due to the high center of gravity of the circuit breaker, please be careful not to dump the circuit breaker when transporting and moving it into and out of the switch cabinet.

Store

If the vacuum circuit breaker must be stored before use, it can only be stored in a dry, dust-free Egypt and well-ventilated place. At the same time, the circuit breaker must be in the opening position, and the spring mechanism should be in a state of no energy storage.

When the circuit breaker is not used for a long time, the conductive surface should be coated with industrial petroleum jelly.

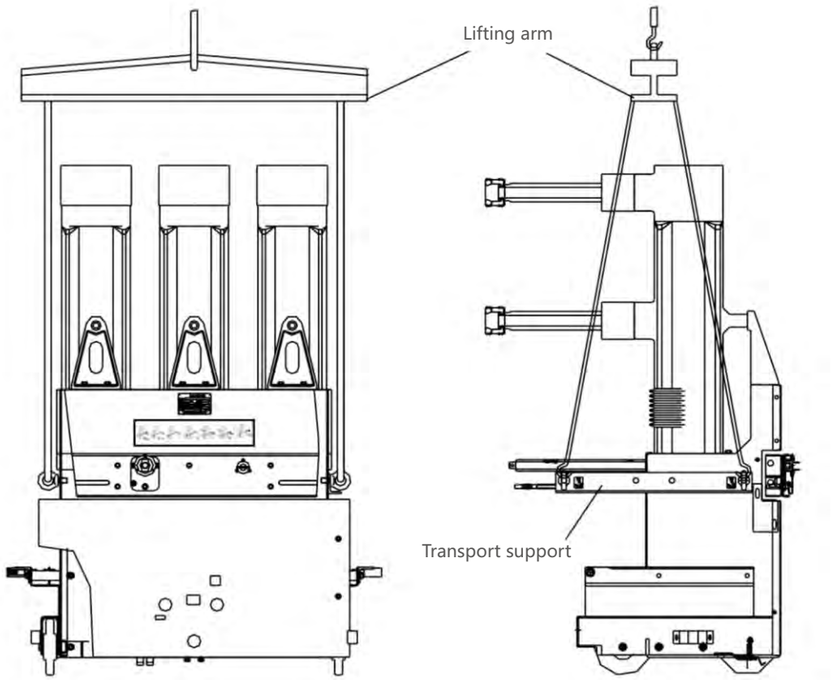

Figure 6 Hoisting diagram

When hoisting, use a lifting cross arm and a transport support to move the circuit breaker. Pay attention to the center of gravity of the circuit breaker to avoid tipping. After transportation, remove the transport support.

○ Random file

Product certificate.

Installation and operation instructions.

Packing list.

○ Order instructions

The order should indicate:

a. Purchased product model, name, quantity.

b. Operating voltage.

c. Spare parts name and quantity.

d. When the hoisting method is used, it must be indicated when ordering.

Product descriptions and legends are for reference only and may change over time. Please contact us without prior notice.